1554H

Top View of Assembly

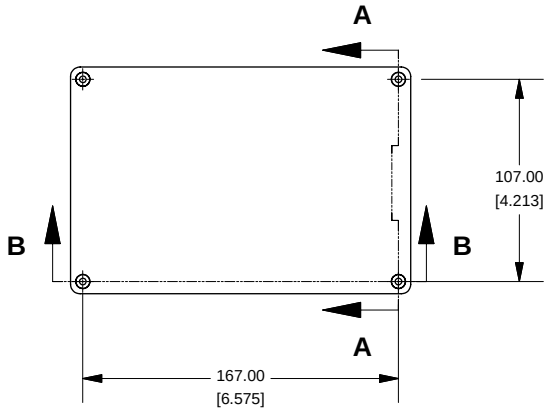

SECTION A-A
End View of Assembly

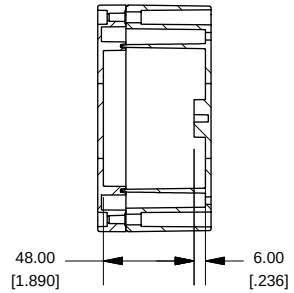

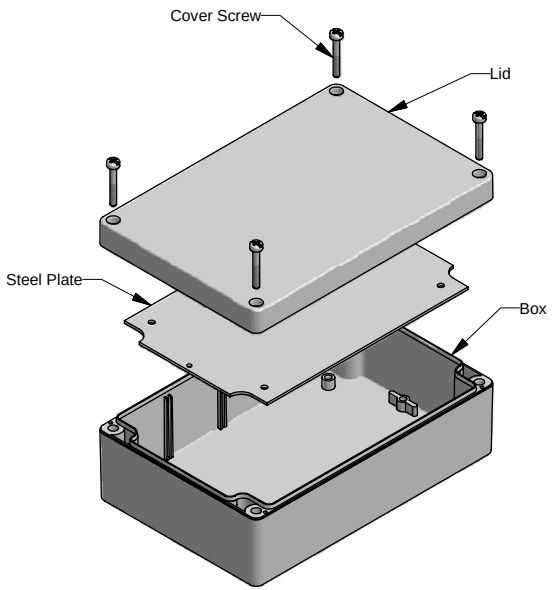

SECTION B-B
Side View of Assembly

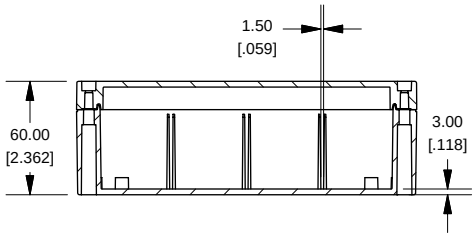

Top View Looking Inside Box

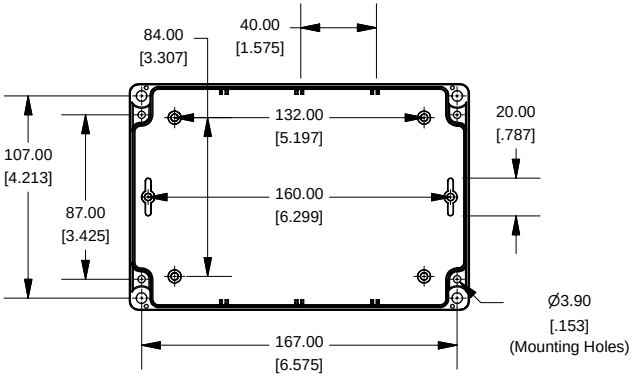

Lid

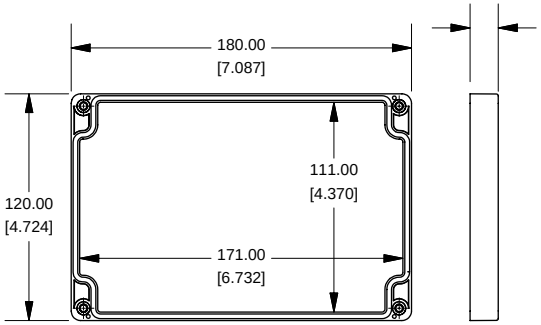

Available 16 Gauge Steel Plate

NOTE: Hole patterns same as seen in top view of box.

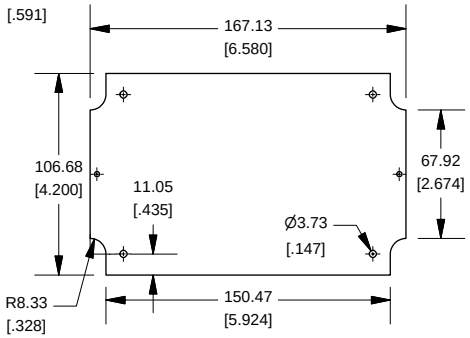

Maximum P.C. Board Size

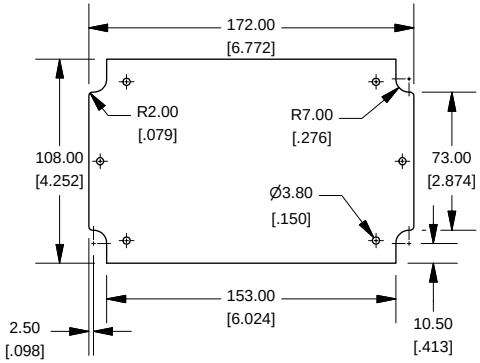

NOTE
Purchased assembly includes box, lid and 4 cover screws. Cover screws should be torqued to 2.5 lbf-in (30 cN-m)
Polycarbonate version is UL 508 approved Enclosure Type 4X, 4, 12 File# E65324

1554H	
1554H Regular Enclosure	
General Purpose ABS	1554HGY
Polycarbonate	1554H2GY
1554H Clear Lid Enclosure	
Polycarbonate	1554H2GYCL
ACCESSORIES	
Heavy Duty 16 Gauge Galvanized Steel Panels	1554HPL
Steel Panel / P.C. Board Machine Screw [M3 X 8mm Nickel Plated]	1591MM100
Steel Panel / P.C. Board Self Tapping Screw [#6 X 1/4" (6.4mm) Nickel Plated]	1598ATS100
Cover Screws (Pkg 4) [M4 X 20mm Stainless Steel]	SC1554

HAMMOND MANUFACTURING™

www.hammondmfg.com