SMT & THROUGH-HOLE BOARD STACKERS

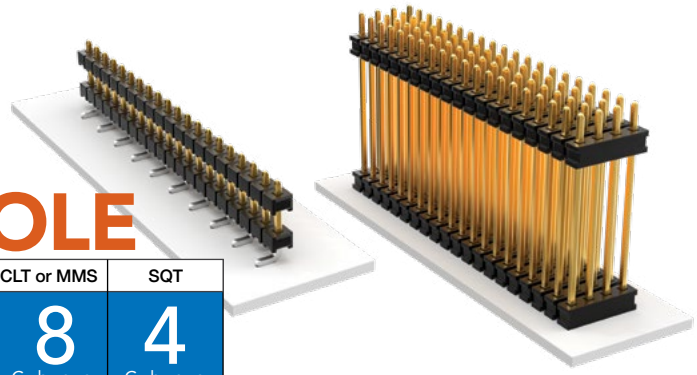

CLT or MMS	SQT
8 Gbps	4 Gbps

(2.00 mm) .0787" PITCH • TW SERIES

TW
Board Mates:
CLT, SQT, SQW, ESQT, TLE, SMM, MMS
Cable Mates:
TCSD

SPECIFICATIONS

Insulator Material:
Black Liquid Crystal Polymer
Terminal Material:
Phosphor Bronze
Plating:
Sn or Au over
50 µ" (1.27 µm) Ni
Current Rating:
TW-SM = 4.9 A per pin
(2 pins powered)
TW-TH = 5.2 A per pin
(2 pins powered)
Operating Temp Range:
-55 °C to +105 °C with Tin;
-55 °C to +125 °C with Gold

PROCESSING

Lead–Free Solderable:
Yes
SMT Lead Coplanarity:
(0.15 mm) .006" max*
*(.004" stencil solution may be available; contact ipg@samtec.com)

ALSO AVAILABLE
MOQ Required

Other Platings
End shrouds with or without guide post

Notes:
For added mechanical stability, Samtec recommends mechanical board spacers be used in applications with gold or selective gold plated connectors. Contact ipg@samtec.com for more information.

This Series is non-standard, non-returnable.

TW – NO. PINS PER ROW – LEAD STYLE – PLATING OPTION – ROW OPTION – STACKER HEIGHT – SM – OTHER OPTION

NO. PINS PER ROW: 02 thru 36

LEAD STYLE: Specify LEAD STYLE from chart

PLATING OPTION
–F = Gold flash on post, Matte Tin on tail
–L = 10 µ" (0.25 µm) Gold on post, Matte Tin on tail
–T = Matte Tin

ROW OPTION
–S = Single Row
–D = Double Row

STACKER HEIGHT
–"XXX" = Stacker Height in inches (0.13 mm) .005" increments
Example: –250 = (6.35 mm) .250"

OTHER OPTION
–"XXX" = Polarized Position
–A = Alignment Pin (Metal or plastic at Samtec discretion) (4.83 mm) .190" min. board space (–D only)
–P = Pick & Place Pad (1.91 mm) .075" min. post height (04-36 only)
–"X"R Specify "T" for Tape & Reel
Specify "F" for Full Reel Tape & Reel (must order max. quantity per reel; contact Samtec for quantity breaks)
(–07 lead style N/A)
(–06 lead style with –P option N/A as standard)

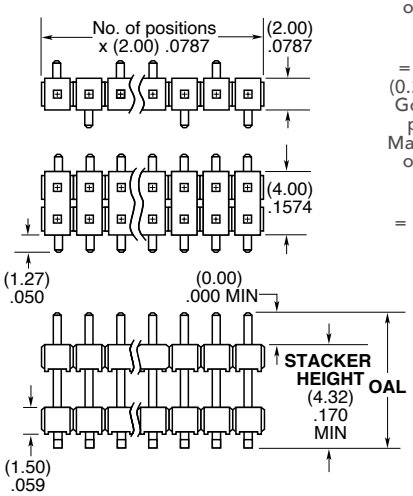

ROW OPTION	A
–S	(5.08) .200
–D	(6.35) .250

LEAD STYLE	OAL
–02	(7.85) .309
–03	(11.86) .467
–04	(12.37) .487
–06	(15.37) .605
–07	(17.35) .683
–09	(9.86) .388

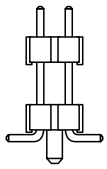
–A OPTION

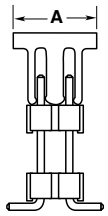

–P OPTION

TW – NO. PINS PER ROW – LEAD STYLE – PLATING OPTION – ROW OPTION – STACKER HEIGHT – TAIL SPEC

NO. PINS PER ROW: 02 thru 50

LEAD STYLE: Specify LEAD STYLE from chart

PLATING OPTION
–F = Gold flash on post, Matte Tin on tail
–L = 10 µ" (0.25 µm) Gold on post, Matte Tin on tail
–T = Matte Tin

ROW OPTION
–S = Single Row
–D = Double Row
–T = Triple Row
–Q = Four Row
–5 = Five Row
–6 = Six Row

STACKER HEIGHT
–"XXX" = Stacker Height in inches (0.13 mm) .005" increments
Example: –250 = (6.35 mm) .250"

TAIL SPEC
–"XXX" = Tail Length in inches (0.13 mm) .005" increments
Example: -150 = (3.81 mm) .150"
–"XXX" = Polarized Position (Specify position to be removed)

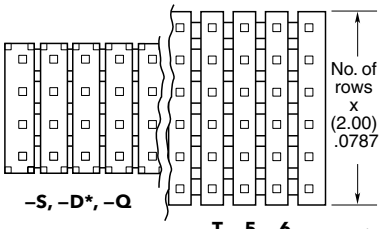

–S, –D*, –Q –T, –5, –6

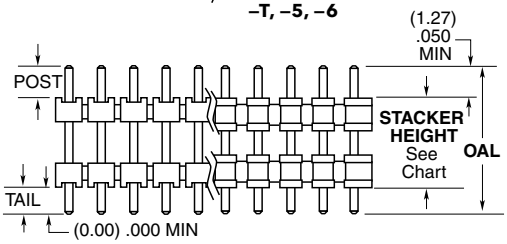

–S, –D*, –Q –T, –5, –6

ROW OPTION	STACKER HEIGHT
–S, –D*, –Q	(3.05) .120 MIN
–T, –5, –6	(4.06) .160 MIN

*–D with stacker height greater than (4.06 mm) .160" will not have standoffs.

LEAD STYLE	OAL
–01	(8.20) .323
–02	(9.60) .377
–03	(13.60) .535
–04	(14.10) .555
–05	(15.10) .594
–06	(17.10) .673
–07	(19.10) .751
–08*	(21.10) .830
–09	(11.60) .456
–10	(15.60) .614
–11	(10.08) .397
–12*	(28.19)1.110

*Style –08 & –12 = S & D only

samtec.com?TW-SM or samtec.com?TW-TH

Unless otherwise approved in writing by Samtec, all parts and components are designed and built according to Samtec's specifications which are subject to change without notice.