THIS DRAWING IS UNPUBLISHED. RELEASED FOR PUBLICATION -,- .
© COPYRIGHT - By - ALL RIGHTS RESERVED.

LOC	DIST
AD	39

REVISIONS

P	LTR	DESCRIPTION	DATE	DWN	APVD
	J4	PART STATUS UPDATED IN PARTS LIST TABLE	27AUG2015	KJK	PS

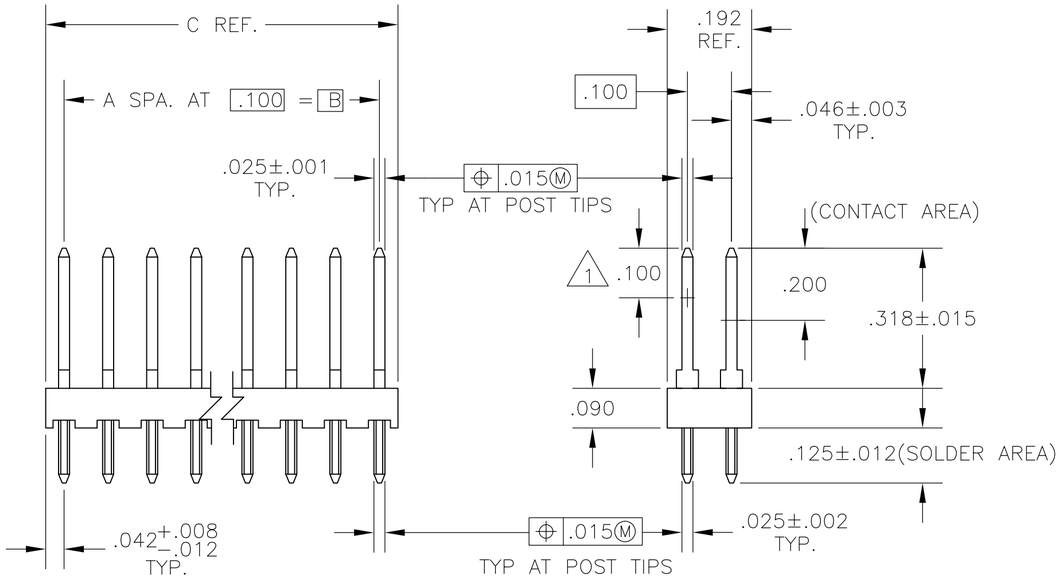

1 POINT OF MEASUREMENT FOR PLATING THICKNESS

2 THE TRUE POSITION TOLERANCE OF THE POST TIPS APPLIES WHEN THE HEADERS HELD FLAT AGAINST THE PRINTED CIRCUIT BOARD

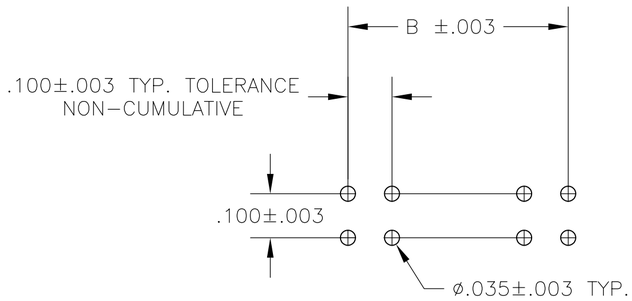

RECOMMENDED HOLE LAYOUT

C	B	A	NO OF POS	ASSEMBLY PART NUMBER
3.984	3.900	39	80	4-87215-0
3.884	3.800	38	78	3- -9
3.784	3.700	37	76	3- -8
3.684	3.600	36	74	3- -7
3.584	3.500	35	72	3- -6
3.484	3.400	34	70	3- -5
3.384	3.300	33	68	3- -4
3.284	3.200	32	66	3- -3
3.184	3.100	31	64	3- -2
3.084	3.000	30	62	3- -1
2.984	2.900	29	60	3- -0
2.884	2.800	28	58	2- -9
2.784	2.700	27	56	2- -8
2.684	2.600	26	54	2- -7
2.584	2.500	25	52	2- -6
2.484	2.400	24	50	2- -5
2.384	2.300	23	48	2- -4
2.284	2.200	22	46	2- -3
2.184	2.100	21	44	2- -2
2.081	2.000	20	42	2 -1
1.984	1.900	19	40	2- -0
1.884	1.800	18	38	1- -9
1.784	1.700	17	36	1- -8
1.684	1.600	16	34	1- -7
1.584	1.500	15	32	1- -6
1.484	1.400	14	30	1- -5
1.384	1.300	13	28	1- -4
1.084	1.000	10	22	1- -3
.284	.200	2	6	1- -2
.184	.100	1	4	1- -1
.084	——	——	2	1- -0
1.284	1.200	12	26	-9
1.184	1.100	11	24	-8
.984	.900	9	20	-7
.884	.800	8	18	-6
.784	.700	7	16	-5
.684	.600	6	14	-4
.584	.500	5	12	-3
.484	.400	4	10	-2
.384	.300	3	8	87215-1

87215

THIS DRAWING IS A CONTROLLED DOCUMENT.

DIMENSIONS: INCHES

TOLERANCES UNLESS OTHERWISE SPECIFIED:
0 PLC ± -
1 PLC ± -
2 PLC ± -
3 PLC ± .005
4 PLC ± -
ANGLES ± -

MATERIAL: HOUSING-FLAME RETARDENT THERMOPLASTIC, COLOR-BLACK; POSTS-PHOS BRONZE

FINISH: POSTS- .000030 GOLD ON THE CONTACT AREA, GOLD FLASH ON SOLDER AREA, ALL OVER .000050 NICKEL

DWN L. MAYER 3-15-85
CHK T. ZOLA 5-21-85
APVD R.ELICKER 5-21-85
PRODUCT SPEC —
APPLICATION SPEC —
WEIGHT —

TE Connectivity

NAME: ASSEMBLY, MOD II, HEADER, DOUBLE ROW, .100 X .100 CL. VERTICAL, .025 SQUARE POSTS

SIZE	CAGE CODE	DRAWING NO	RESTRICTED TO
A2	00779	C-87215	—

CUSTOMER DRAWING | SCALE — | SHEET 1 OF 1 | REV J4