THIS DRAWING IS UNPUBLISHED. RELEASED FOR PUBLICATION -,- .
© COPYRIGHT - By - ALL RIGHTS RESERVED.

LOC	DIST
AF	50

REVISIONS

P	LTR	DESCRIPTION	DATE	DWN	APVD
	K	REVISED PER ECR-13-011489	04DEC2013	KH	PD

1 CONTINUOUS STRIP ON REELS.

2 WIRE SIZE IS [22-18] AWG.

3 INSULATION RANGE IS 1.78-3.30 [.070-.130] DIA.

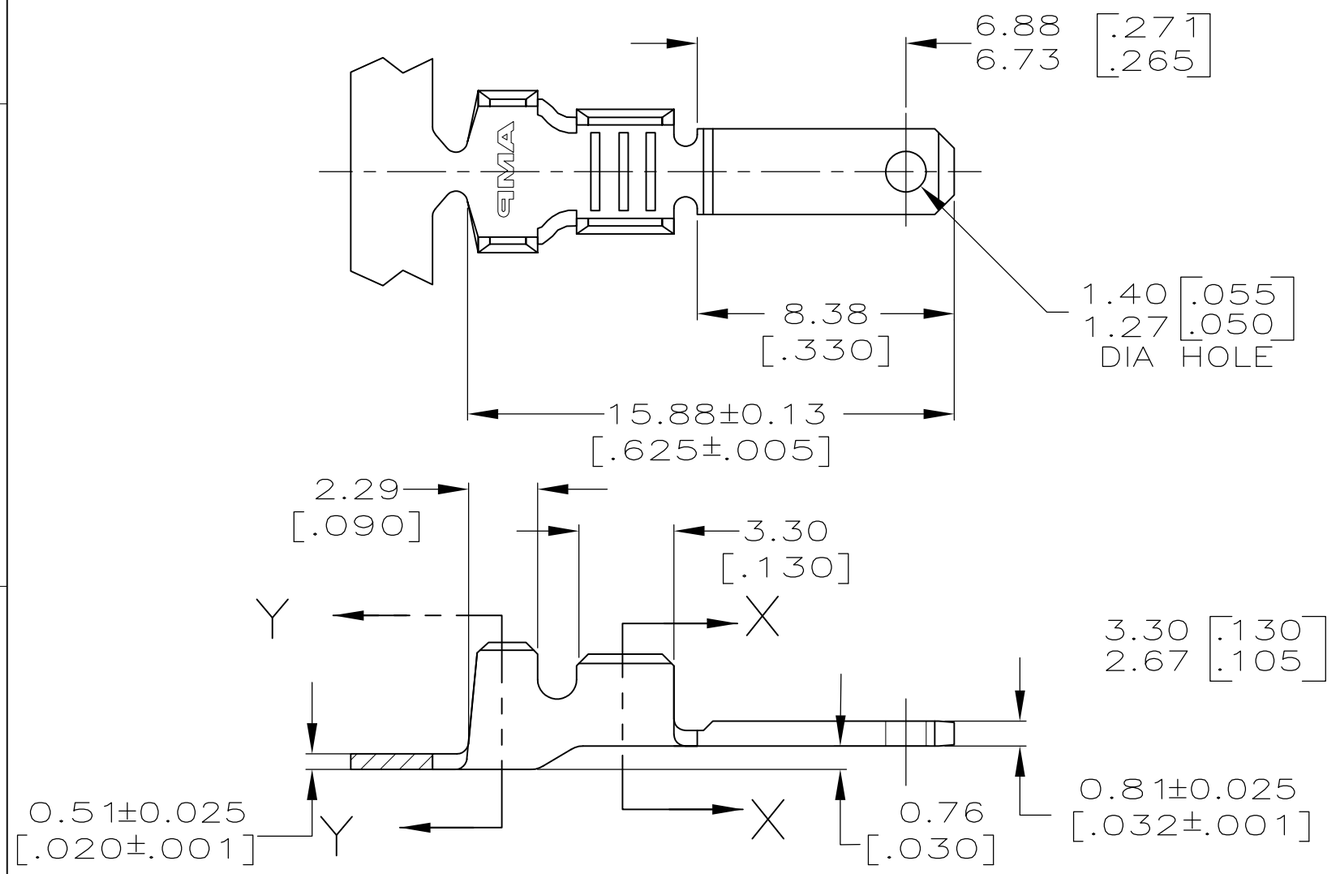

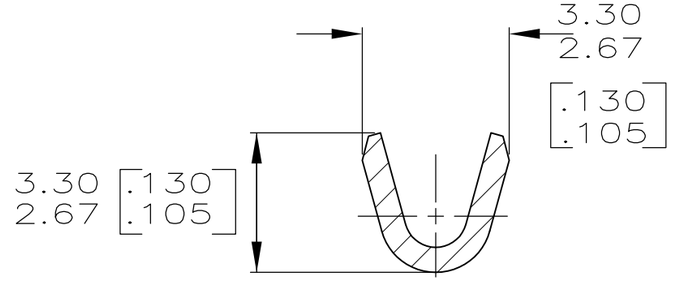

SECTION X-X
SCALE 10:1

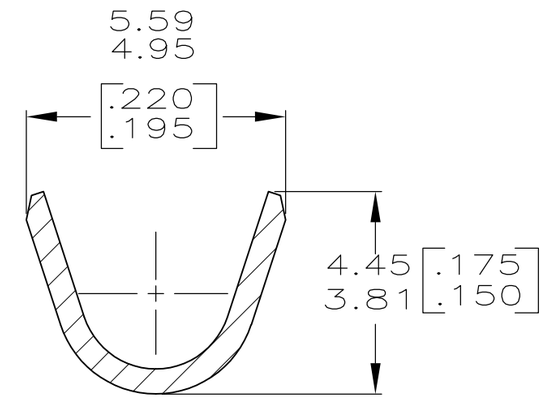

SECTION Y-Y
SCALE 10:1

PLAIN	63138-2
TIN	63138-1
FINISH	PART NO

THIS DRAWING IS A CONTROLLED DOCUMENT.

DIMENSIONS: mm [INCHES]

TOLERANCES UNLESS OTHERWISE SPECIFIED:

0 PLC	± -
1 PLC	± -
2 PLC	± 0.38 [.015]
3 PLC	± -
4 PLC	± -
ANGLES	± -

MATERIAL: BRASS

FINISH: SEE TABLE

DWN	JR RUTH	3/21/95
CHK	MS FEHER	3/21/95
APVD	J HUZVAR	3/21/95
PRODUCT SPEC	—	
APPLICATION SPEC	—	
WEIGHT	—	

TE Connectivity

NAME: TAB, FASTON,™ 2.79 [.110] SERIES

SIZE	CAGE CODE	DRAWING NO	RESTRICTED TO
A3	00779	C-63138	—

CUSTOMER DRAWING

SCALE	SHEET	REV
5:1	1 OF 1	K