THIS DRAWING IS UNPUBLISHED. RELEASED FOR PUBLICATION -,- .
© COPYRIGHT - By - ALL RIGHTS RESERVED.

REVISIONS

P	LTR	DESCRIPTION	DATE	DWN	APVD
	D2	REVISED PER ECR-16-016667	28NOV2016	JJ	TD

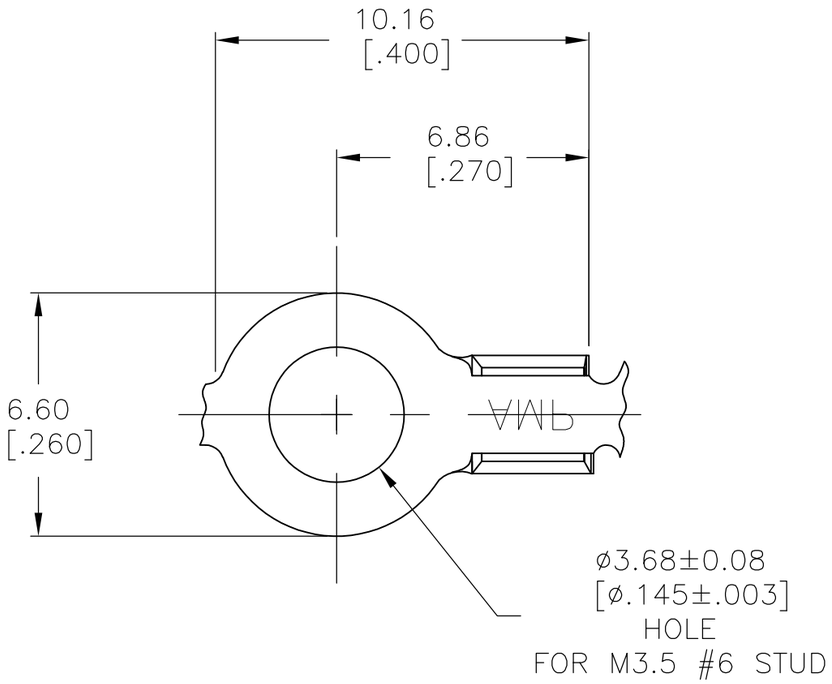

1 CONTINUOUS STRIP ON REELS

2 PRELIMINARY-NOT FOR PRODUCTION.

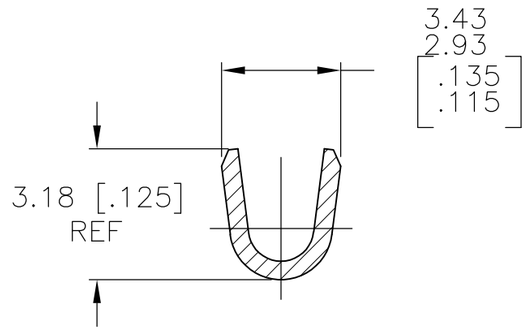

SECTION A-A

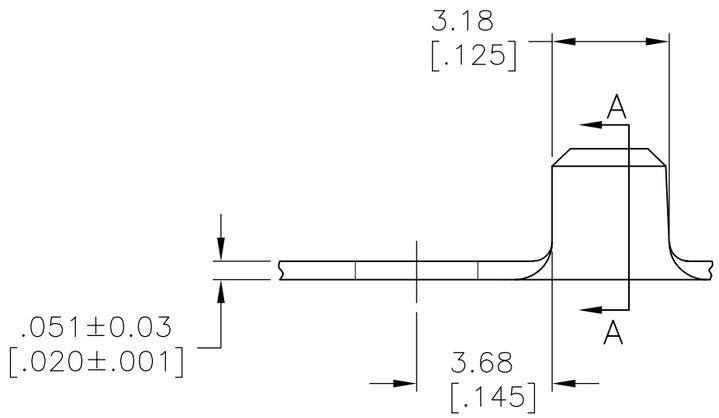

MATERIAL	WIRE RANGE	PART NO
STAINLESS STEEL	0.5-1.4mm² [#20-#16]	2 40811-2
T3 STEEL	0.5-1.4mm² [#20-#16]	40811-1
BRASS	0.5-1.4mm² [#20-#16]	40811

THIS DRAWING IS A CONTROLLED DOCUMENT.

DIMENSIONS: mm [INCHES]

TOLERANCES UNLESS OTHERWISE SPECIFIED:
0 PLC ± -
1 PLC ± -
2 PLC ± -
3 PLC ± 0.38 [.015]
4 PLC ± -
ANGLES ± -

MATERIAL: SEE TABLE

FINISH: TIN

DWN RAGHAVENDRA 23FEB09
CHK JEFF RUTH 23FEB09
APVD DON DECKER 23FEB09
PRODUCT SPEC —
APPLICATION SPEC —
WEIGHT 0.000000

TE Connectivity

NAME: RING

SIZE	CAGE CODE	DRAWING NO	RESTRICTED TO
A3	00779	C-40811	—

CUSTOMER DRAWING | SCALE 6:1 | SHEET 1 OF 1 | REV D2