PART NUMBER	ITEM 1 BODY	ITEM 2 CONTACT	ITEM 3 INSULATOR	ITEM 4 SEAL RING	ITEM 5 LOCK WASHER	ITEM 6 NUT
141-0594-421	STAINLESS STEEL GOLD PL .00001 MIN OVER NICKEL PL .00005 MIN OVER	BERYLLIUM COPPER GOLD PL .00005 MIN OVER NICKEL PL .00005 MIN OVER COPPER PL .00005 MIN	TEFLON	SILICONE RUBBER	STAINLESS STEEL GOLD PL .00001 MIN OVER NICKEL PL .00005 MIN OVER	STAINLESS STEEL GOLD PL .00001 MIN OVER NICKEL PL .00005 MIN OVER

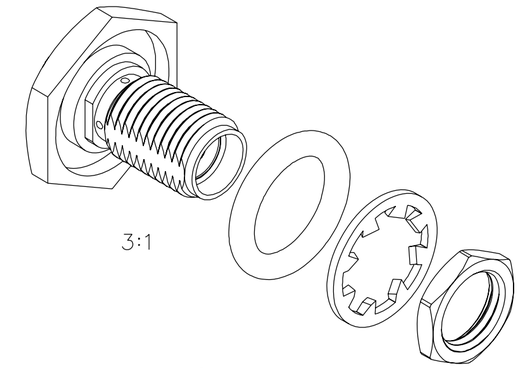

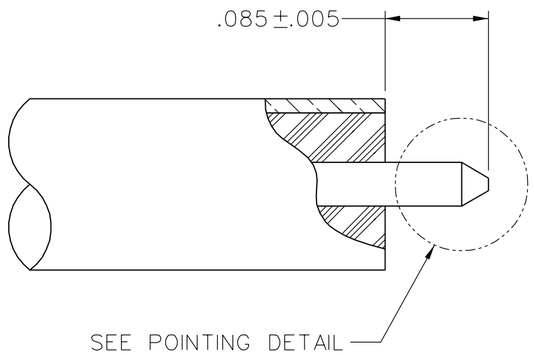

CABLE STRIP DIMENSIONS

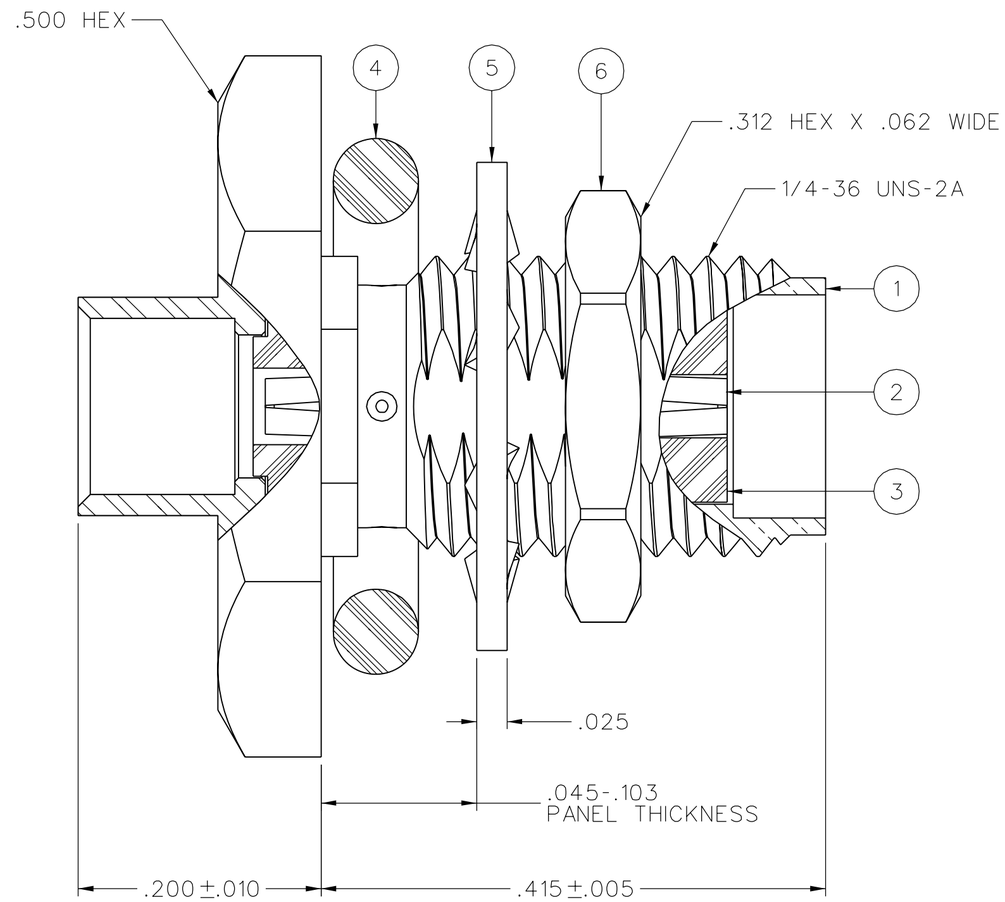

NOTES:

1. SPECIFICATIONS:

IMPEDANCE: 50 OHMS
FREQUENCY RANGE: 0-25 GHZ
VSWR: 1.05+.01F(GHz) MAX AT 0-18 GHz, TYPICALLY < 1.25 AT 18-25 GHz
WORKING VOLTAGE: 500 VRMS MAX AT SEA LEVEL
DIELECTRIC WITHSTANDING VOLTAGE: 1500 VRMS MIN AT SEA LEVEL
INSULATION RESISTANCE: 5000 MEGOHM MIN
CONTACT RESISTANCE:
CENTER CONTACT - INITIAL 5.0 MILLIOHM MAX, AFTER ENVIRONMENTAL 8.0 MILLIOHM MAX
OUTER CONDUCTOR - INITIAL 2.0 MILLIOHM MAX, AFTER ENVIRONMENTAL NOT APPLICABLE
BODY TO CABLE - 0.5 MILLIOHM MAX
CORONA LEVEL: 375 VOLTS MIN AT 70,000 FEET
INSERTION LOSS: $.03\sqrt{F}$ (F IN GHZ), TESTED AT 10 GHZ
RF LEAKAGE: -90 DB MIN AT 2 TO 3 GHZ
RF HIGH POTENTIAL WITHSTANDING VOLTAGE: 1000 VRMS AT 4 AND 7 MHZ

MECHANICAL:

ENGAGE/DISENGAGE TORQUE: 2 IN-LBS MAX
MATING TORQUE: 7-10 IN-LBS
COUPLING PROOF TORQUE: NOT APPLICABLE
COUPLING NUT RETENTION: NOT APPLICABLE
CONTACT RETENTION: 6 LBS MIN AXIAL FORCE
CABLE ACCEPTABILITY: RG 402, .141 OD SEMI RIGID
CABLE HEX CRIMP SIZE: NOT APPLICABLE
CABLE RETENTION: 60 LBS MIN AXIAL FORCE
55 IN-OUNCE MIN TORQUE
DURABILITY: 500 CYCLES MIN

ENVIRONMENTAL:

(MEETS OR EXCEEDS THE APPLICABLE PARAGRAPH OF MIL-PRF-39012)
THERMAL SHOCK: MIL-STD-202, METHOD 107, CONDITION B, EXCEPT 115°C HIGH TEMP
OPERATING TEMPERATURE: -65°C TO 165°C
CORROSION: MIL-STD-202, METHOD 101, CONDITION B
SHOCK: MIL-STD-202, METHOD 213, CONDITION I
VIBRATION: MIL-STD-202, METHOD 204, CONDITION D
MOISTURE RESISTANCE: MIL-STD-202, METHOD 106

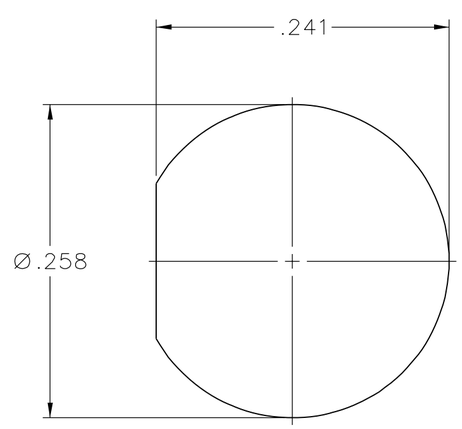

MOUNTING HOLE

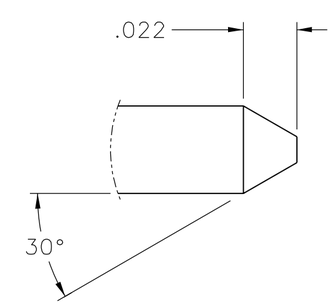

POINTING DETAIL
20:1

DRAWING NO.						
C-141-0594-421/430						
0	REVISIONS					
ENGINEERING RELEASE						
1	12-20-05	PAT	SBD	PDW		5-12-06 ECN 50106

CUSTOMER DRAWING

THIS DRAWING TO BE INTERPRETED PER ASME Y 14.5M - 1994

"μSTATION"

COMPANY CONFIDENTIAL

TOLERANCE UNLESS OTHERWISE SPECIFIED		DRAWN BY PAT	DATE 12-16-05
DECIMALS	mm	CHECKED BY PDW	DATE 5-12-06
.XX		APPROVED BY SBD	DATE 5-12-06
.XXX REF		RELEASE DATE	5-12-06
MATL		U/M INCH	SCALE 10:1
FINISH			

EMERSON. Network Power
Connectivity Solutions
P.O. Box 1732
Waseca, MN 56093
1-800-247-8256

TITLE
SMA BKHD JACK ASSY
ONE PIECE CONNECTOR,
RG-402, .141 SEMI-RIGID

SHEET 2 OF 2

DRAWING NO. C-141-0594-421/430