DUAL-IN-LINE SOCKETS

SERIES 116 • ELEVATED • OPEN FRAME

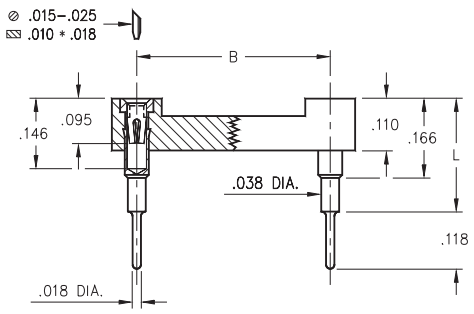

See page 130 for Insulator Details

- Ideal for raised component requirements and stacking of PCBs
- Sockets are XY stackable
- Hi-Rel, 4-finger BeCu #30 contact is rated at 3 amps. See page 253 for details
- Series 116 uses MM #0153-X pins. See page 167 for details
- Insulators are high temperature thermoplastic, suitable for all soldering operations
- For Electrical, Mechanical and Environmental Data, see page 264 for details

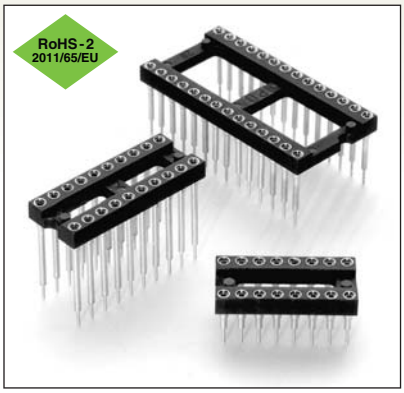

ORDERING INFORMATION

Total number of pins	A	B	C	Quantity per tube	L = .236 (#0153-1 pin)	L = .315 (#0153-2 pin)	L = .402 (#0153-3 pin)	L = .472 (#0153-4 pin)	L = .594 (#0153-5 pin)
10	0.5	0.2	0.3	40	116-XX-210-41-006000	116-XX-210-41-003000	116-XX-210-41-007000	116-XX-210-41-008000	116-XX-210-41-001000
4	0.2	0.3	0.4	102	116-XX-304-41-006000	116-XX-304-41-003000	116-XX-304-41-007000	116-XX-304-41-008000	116-XX-304-41-001000
6	0.3	0.3	0.4	67	116-XX-306-41-006000	116-XX-306-41-003000	116-XX-306-41-007000	116-XX-306-41-008000	116-XX-306-41-001000
8	0.4	0.3	0.4	50	116-XX-308-41-006000	116-XX-308-41-003000	116-XX-308-41-007000	116-XX-308-41-008000	116-XX-308-41-001000
10	0.5	0.3	0.4	40	116-XX-310-41-006000	116-XX-310-41-003000	116-XX-310-41-007000	116-XX-310-41-008000	116-XX-310-41-001000
14	0.7	0.3	0.4	28	116-XX-314-41-006000	116-XX-314-41-003000	116-XX-314-41-007000	116-XX-314-41-008000	116-XX-314-41-001000
16	0.8	0.3	0.4	25	116-XX-316-41-006000	116-XX-316-41-003000	116-XX-316-41-007000	116-XX-316-41-008000	116-XX-316-41-001000
18	0.9	0.3	0.4	22	116-XX-318-41-006000	116-XX-318-41-003000	116-XX-318-41-007000	116-XX-318-41-008000	116-XX-318-41-001000
20	1.0	0.3	0.4	20	116-XX-320-41-006000	116-XX-320-41-003000	116-XX-320-41-007000	116-XX-320-41-008000	116-XX-320-41-001000
22	1.1	0.3	0.4	18	116-XX-322-41-006000	116-XX-322-41-003000	116-XX-322-41-007000	116-XX-322-41-008000	116-XX-322-41-001000
24	1.2	0.3	0.4	16	116-XX-324-41-006000	116-XX-324-41-003000	116-XX-324-41-007000	116-XX-324-41-008000	116-XX-324-41-001000
28	1.4	0.3	0.4	14	116-XX-328-41-006000	116-XX-328-41-003000	116-XX-328-41-007000	116-XX-328-41-008000	116-XX-328-41-001000
20	1.0	0.4	0.5	20	116-XX-420-41-006000	116-XX-420-41-003000	116-XX-420-41-007000	116-XX-420-41-008000	116-XX-420-41-001000
22	1.1	0.4	0.5	18	116-XX-422-41-006000	116-XX-422-41-003000	116-XX-422-41-007000	116-XX-422-41-008000	116-XX-422-41-001000
24	1.2	0.4	0.5	16	116-XX-424-41-006000	116-XX-424-41-003000	116-XX-424-41-007000	116-XX-424-41-008000	116-XX-424-41-001000
28	1.4	0.4	0.5	14	116-XX-428-41-006000	116-XX-428-41-003000	116-XX-428-41-007000	116-XX-428-41-008000	116-XX-428-41-001000
32	1.6	0.4	0.5	12	116-XX-432-41-006000	116-XX-432-41-003000	116-XX-432-41-007000	116-XX-432-41-008000	116-XX-432-41-001000
24	1.2	0.6	0.7	16	116-XX-624-41-006000	116-XX-624-41-003000	116-XX-624-41-007000	116-XX-624-41-008000	116-XX-624-41-001000
28	1.4	0.6	0.7	14	116-XX-628-41-006000	116-XX-628-41-003000	116-XX-628-41-007000	116-XX-628-41-008000	116-XX-628-41-001000
32	1.6	0.6	0.7	12	116-XX-632-41-006000	116-XX-632-41-003000	116-XX-632-41-007000	116-XX-632-41-008000	116-XX-632-41-001000
36	1.8	0.6	0.7	11	116-XX-636-41-006000	116-XX-636-41-003000	116-XX-636-41-007000	116-XX-636-41-008000	116-XX-636-41-001000
40	2.0	0.6	0.7	10	116-XX-640-41-006000	116-XX-640-41-003000	116-XX-640-41-007000	116-XX-640-41-008000	116-XX-640-41-001000
42	2.1	0.6	0.7	9	116-XX-642-41-006000	116-XX-642-41-003000	116-XX-642-41-007000	116-XX-642-41-008000	116-XX-642-41-001000
48	2.4	0.6	0.7	8	116-XX-648-41-006000	116-XX-648-41-003000	116-XX-648-41-007000	116-XX-648-41-008000	116-XX-648-41-001000
50	2.5	0.6	0.7	8	116-XX-650-41-006000	116-XX-650-41-003000	116-XX-650-41-007000	116-XX-650-41-008000	116-XX-650-41-001000
52	2.6	0.6	0.7	7	116-XX-652-41-006000	116-XX-652-41-003000	116-XX-652-41-007000	116-XX-652-41-008000	116-XX-652-41-001000
50	2.5	0.9	1.0	8	116-XX-950-41-006000	116-XX-950-41-003000	116-XX-950-41-007000	116-XX-950-41-008000	116-XX-950-41-001000
52	2.6	0.9	1.0	7	116-XX-952-41-006000	116-XX-952-41-003000	116-XX-952-41-007000	116-XX-952-41-008000	116-XX-952-41-001000
64	3.2	0.9	1.0	6	116-XX-964-41-006000	116-XX-964-41-003000	116-XX-964-41-007000	116-XX-964-41-008000	116-XX-964-41-001000

SPECIFY PLATING CODE XX=		91	93	41 ◆	43 ◆	XX=Plating Code See to Left
Sleeve (Pin)		200 µ" Sn/Pb	200 µ" Sn/Pb	200 µ" Sn	200 µ" Sn	
Contact (Clip)		10 µ" Au	30 µ" Au	10 µ" Au	30 µ" Au	