KSZ8795CLX

Integrated 5-Port 10/100-Managed Ethernet Switch with Gigabit GMII/RGMII and MII/RMII Interfaces

Target Applications

- Industrial Ethernet Applications that Employ IEEE 802.3-Compliant MACs. (Ethernet/IP, Profinet, MODBUS TCP, etc.)
- VoIP Phone
- Set-Top/Game Box
- Automotive
- Industrial Control
- IPTV POF
- SOHO Residential Gateway with Full-Wire Speed of Four LAN Ports
- Broadband Gateway/Firewall/VPN
- Integrated DSL/Cable Modem
- Wireless LAN Access Point + Gateway
- Standalone 10/100 Switch
- Networked Measurement and Control Systems

Features

- Management Capabilities
  - The KSZ8795CLX Includes All the Functions of a 10/100BASE-T/TX Switch System Which Combines a Switch Engine, Frame Buffer Management, Address Look-Up Table, Queue Management, MIB Counters, Media Access Controllers (MAC), and PHY Transceivers
  - Non-Blocking Store-and-Forward Switch Fabric Assures Fast Packet Delivery by Utilizing a 1024-Entries Forwarding Table
  - Port Mirroring/Monitoring/Sniffing: Ingress and/or Egress Traffic to Any Port
  - MIB Counters for Fully-Compliant Statistics Gathering (36 Counters per Port)
  - Support Hardware for Port-Based Flush and Freeze Command in MIB Counter.
  - Multiple Loopback of Remote, PHY, and MAC Modes Support for the Diagnostics
  - Rapid Spanning Tree Support (RSTP) for Topology Management and Ring/Linear Recovery
- Robust PHY Ports
  - Four Integrated IEEE 802.3/802.3u-Compliant Ethernet Transceivers Supporting 10BASE-T and 100BASE-TX
  - 802.1az EEE Supported
  - On-Chip Termination Resistors and Internal Biasing for Differential Pairs to Reduce Power
  - HP Auto MDI/MDI-X Crossover Support Eliminates the Need to Differentiate Between Straight or Crossover Cables in Applications
- MAC and GMAC Ports
  - Four Internal Media Access Control (MAC1 to MAC4) Units and One Internal Gigabit Media Access Control (GMAC5) Unit
  - GMII, RGMII, MII or RMII Interfaces Support for the Port 5 GMAC5 with Uplink
  - 2 KByte Jumbo Packet Support
  - Tail Tagging Mode (One Byte Added Before FCS) Support on Port 5 to Inform the Processor in which the Ingress Port Receives the Packet and its Priority
  - Supports Reduced Media Independent Interface (RMII) with 50 MHz Reference Clock Output
  - Supports Media Independent Interface (MII) in Either PHY Mode or MAC Mode on Port 5
  - LinkMD® Cable Diagnostic Capabilities for Determining Cable Opens, Shorts, and Length
- Advanced Switch Capabilities
  - Non-Blocking Store-and-Forward Switch Fabric Assures Fast Packet Delivery by Utilizing 1024 Entry Forwarding Table
  - 64 KB Frame Buffer RAM
  - IEEE 802.1q VLAN Support for up to 128 Active VLAN Groups (Full-Range 4096 of VLAN IDs)
  - IEEE 802.1p/Q Tag Insertion or Removal on a Per Port Basis (Egress)
  - VLAN ID Tag/Untag Options on Per Port Basis
  - Fully Compliant with IEEE 802.3/802.3u Standards
  - IEEE 802.3x Full-Duplex with Force-Mode Option and Half-Duplex Back-Pressure Collision Flow Control
  - IEEE 802.1w Rapid Spanning Tree Protocol Support

© 2016-2017 Microchip Technology Inc.

- IGMP v1/v2/v3 Snooping for Multicast Packet Filtering
- QoS/CoS Packets Prioritization Support: 802.1p, DiffServ-Based and Re-Mapping of 802.1p Priority Field Per Port Basis on Four Priority Levels
- IPv4/IPv6 QoS Support
- IPV6 Multicast Listener Discovery (MLD) Snooping
- Programmable Rate Limiting at the Ingress and Egress Ports on a Per Port Basis
- Jitter-Free Per Packet Based Rate Limiting Support
- Tail Tag Mode (1 byte Added before FCS) Support on Port 5 to Inform the Processor which Ingress Port Receives the Packet
- Broadcast Storm Protection with Percentage Control (Global and Per Port Basis)
- 1K Entry Forwarding Table with 64 KB Frame Buffer
- 4 Priority Queues with Dynamic Packet Mapping for IEEE 802.1P, IPV4 TOS (DIFFSERV), IPv6 Traffic Class, etc.
- Supports WoL Using AMD's Magic Packet
- VLAN and Address Filtering
- Supports 802.1x Port-Based Security, Authentication and MAC-Based Authentication via Access Control Lists (ACL)
- Provides Port-Based and Rule-Based ACLs to Support Layer 2 MAC SA/DA Address, Layer 3 IP Address and IP Mask, Layer 4 TCP/UDP Port Number, IP Protocol, TCP Flag and Compensation for the Port Security Filtering
- Ingress and Egress Rate Limit Based on Bit per Second (bps) and Packet-Based Rate Limiting (pps)

• Configuration Registers Access
- High-Speed SPI (4-Wire, up to 50 MHz) Interface to Access All Internal Registers
- MII Management (MIIM, MDC/MDIO 2-Wire) Interface to Access All PHY Registers per Clause 22.2.4.5 of the IEEE 802.3 Specification
- I/O Pin Strapping Facility to Set Certain Register Bits from I/O Pins During Reset Time
- Control Registers Configurable On-the-Fly

• Power and Power Management
- Full-Chip Software Power-Down (All Register Values are Not Saved and Strap-In value Will Re-Strap after it Releases the Power-Down)
- Per-Port Software Power-Down
- Energy Detect Power-Down (EDPD), which Disables the PHY Transceiver When Cables are Removed
- Supports IEEE P802.3az Energy Efficient Ethernet (EEE) to Reduce Power Consumption in Transceivers in LPI State Even Though Cables are Not Removed
- Dynamic Clock Tree Control to Reduce Clocking in Areas that are Not in Use
- Low Power Consumption without Extra Power Consumption on Transformers
- Voltages: Using External LDO Power Supplies
- Analog V_{DDAT} 3.3V or 2.5V
- V_{DDIO} Support 3.3V, 2.5V, and 1.8V
- Low 1.2V Voltage for Analog and Digital Core Power
- WoL Support with Configurable Packet Control

• Additional Features
- Single 25 MHz +50 ppm Reference Clock Requirement
- Comprehensive Programmable Two-LED Indicator Support for Link, Activity, Full-/Half-Duplex, and 10/100 Speed

• Packaging and Environmental
- Commercial Temperature Range: 0°C to +70°C
- Industrial Temperature Range: –40°C to +85°C
- Package Available in an 80-Pin LQFP, Lead-Free (RoHS-Compliant) Package
- Supports Human Body Model (HBM) ESD Rating of 5 kV
- 0.065 µm CMOS Technology for Lower Power Consumption

© 2016-2017 Microchip Technology Inc.

TO OUR VALUED CUSTOMERS

It is our intention to provide our valued customers with the best documentation possible to ensure successful use of your Microchip products. To this end, we will continue to improve our publications to better suit your needs. Our publications will be refined and enhanced as new volumes and updates are introduced.

If you have any questions or comments regarding this publication, please contact the Marketing Communications Department via E-mail at **docerrors@microchip.com**. We welcome your feedback.

Most Current Data Sheet

To obtain the most up-to-date version of this data sheet, please register at our Worldwide Web site at:

http://www.microchip.com

You can determine the version of a data sheet by examining its literature number found on the bottom outside corner of any page. The last character of the literature number is the version number, (e.g., DS30000000A is version A of document DS30000000).

Errata

An errata sheet, describing minor operational differences from the data sheet and recommended workarounds, may exist for current devices. As device/documentation issues become known to us, we will publish an errata sheet. The errata will specify the revision of silicon and revision of document to which it applies.

To determine if an errata sheet exists for a particular device, please check with one of the following:

- Microchip's Worldwide Web site; http://www.microchip.com
- Your local Microchip sales office (see last page)

When contacting a sales office, please specify which device, revision of silicon and data sheet (include -literature number) you are using.

Customer Notification System

Register on our web site at **www.microchip.com** to receive the most current information on all of our products.

Table of Contents

1.0 Introduction 5
2.0 Pin Description and Configuration 6
3.0 Functional Description 14
4.0 Device Registers 47
5.0 Operational Characteristics 113
6.0 Electrical Characteristics 114
7.0 Timing Diagrams 116
8.0 Reset Circuit 126
9.0 Selection of Isolation Transformer 127
10.0 Selection of Reference Crystal 127
11.0 Package Outlines 128
Appendix A: Data Sheet Revision History 129
The Microchip Web Site 130
Customer Change Notification Service 130
Customer Support 130
Product Identification System 131

© 2016-2017 Microchip Technology Inc.

1.0 INTRODUCTION

1.1 General Description

The KSZ8795CLX is a highly integrated, Layer 2-managed, 5-port switch with numerous features designed to reduce system cost. It is intended for cost-sensitive applications requiring four 10/100 Mbps copper ports and one 10/100/1000 Mbps Gigabit uplink port. The KSZ8795CLX incorporates a small package outline, lowest power consumption with internal biasing, and on-chip termination. Its extensive features set includes enhanced power management, programmable rate limiting and priority ratio, tagged and port-based VLAN, port-based security and ACL rule-based packet filtering technology, quality-of-service (QoS) priority with four queues, management interfaces, enhanced MIB counters, high-performance memory bandwidth, and a shared memory-based switch fabric with non-blocking support. The KSZ8795CLX provides support for multiple CPU data interfaces to effectively address both current and emerging fast Ethernet and Gigabit Ethernet applications where the port 5 GMAC can be configured to any of GMII, RGMII, MII and RMII modes.

The KSZ8795CLX is built upon industry-leading Ethernet analog and digital technology, with features designed to offload host processing and streamline the overall design.

- Four integrated 10/100BASE-T/TX MAC/PHYs
- One integrated 10/100/1000BASE-T/TX GMAC with selectable GMII, RGMII, MII, and RMII interfaces
- Small 80-pin LQFP package

A robust assortment of power-management features including Energy Efficient Ethernet (EEE), PME, and Wake-on-LAN (WoL) have been designed-in to satisfy energy-efficient environments.

KSZ8795CLX supports two management interface modes of SPI and MIIM only, SPI access all registers, MIIM mode access all PHYs registers through MDC/MDIO interface.

FIGURE 1-1: FUNCTIONAL BLOCK DIAGRAM

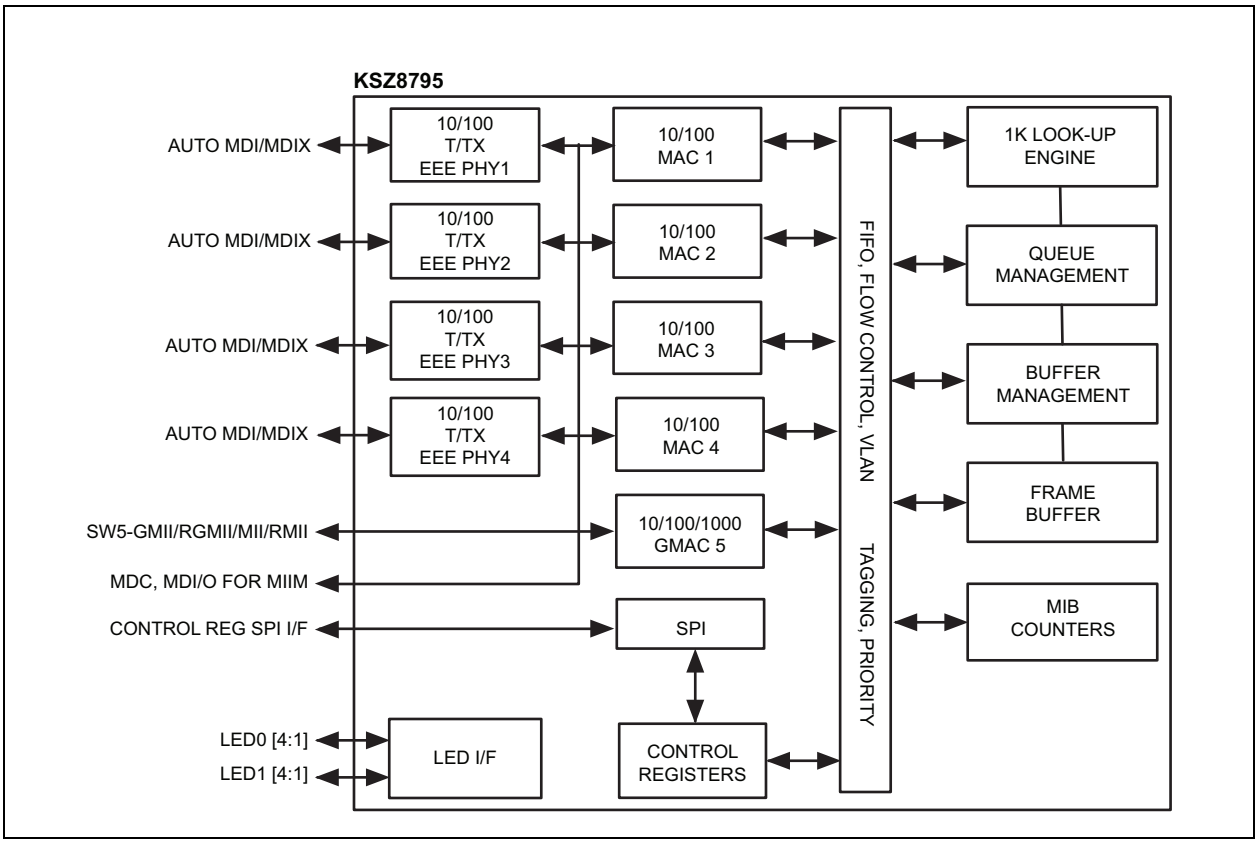

2.0 PIN DESCRIPTION AND CONFIGURATION

FIGURE 2-1: 80-LQFP PIN ASSIGNMENT (TOP VIEW)

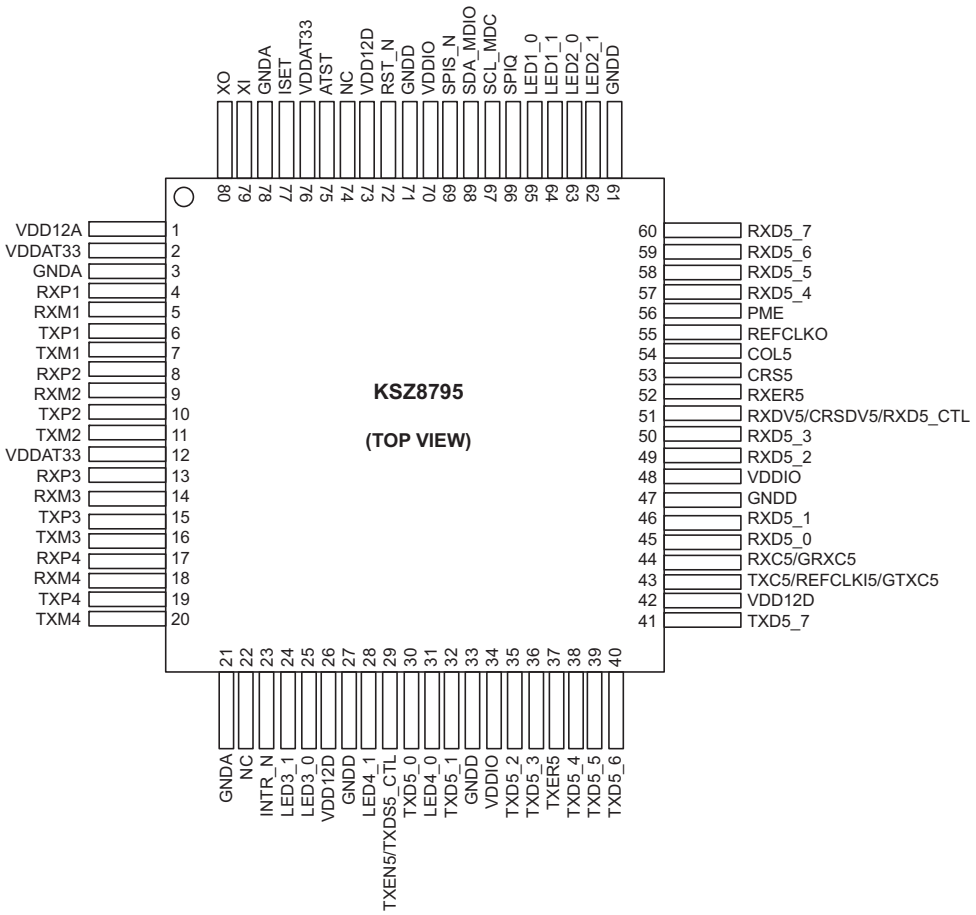

© 2016-2017 Microchip Technology Inc.

TABLE 2-1: SIGNALS - KSZ8795CLX

Pin Number	Pin Name	Type Note 2-1	Port	Description
1	VDD12A	P	—	1.2V Core Power
2	VDDAT	P	—	3.3V or 2.5V Analog Power.
3	GNDA	GND	—	Analog Ground.
4	RXP1	I	1	Port 1 Physical Receive Signal + (Differential).
5	RXM1	I	1	Port 1 Physical Receive Signal - (Differential).
6	TXP1	O	1	Port 1 Physical Transmit Signal + (Differential).
7	TXM1	O	1	Port 1 Physical Transmit Signal - (Differential).
8	RXP2	I	2	Port 2 Physical Receive Signal + (Differential).
9	RXM2	I	2	Port 2 Physical Receive Signal - (Differential).
10	TXP2	O	2	Port 2 Physical Transmit Signal + (Differential).
11	TXM2	O	2	Port 2 Physical Transmit Signal - (Differential).
12	VDDAT	P		3.3V or 2.5V Analog Power.
13	RXP3	I	3	Port 3 Physical Receive Signal + (Differential).
14	RXM3	I	3	Port 3 Physical Receive Signal - (Differential).
15	TXP3	O	3	Port 3 Physical Transmit Signal + (Differential).
16	TXM3	O	3	Port 3 Physical Transmit Signal – (Differential).
17	RXP4	I	4	Port 4 Physical Receive Signal + (Differential).
18	RXM4	I	4	Port 4 Physical Receive Signal - (Differential).
19	TXP4	O	4	Port 4 Physical Transmit Signal + (Differential).
20	TXM4	O	4	Port 4 Physical Transmit Signal - (Differential).
21	GNDA	GND	—	Analog Ground.
22	NC	NC	—	No Connect.
23	INTR_N	Opu	—	Interrupt: Active-Low. This pin is open-drain output pin. **Note:** An external pull-up resistor is needed on this pin when it is in use.
24	LED3_1	Ipu/O	3	Port 3 LED Indicator 1: See Global Register 11 bits [5:4] for details. Strap Option: Switch Port 5 GMAC5 interface mode select by LED3[1:0] 00 = MII for SW5-MII 01 = RMII for SW5-RMII 10 = GMII for SW5-GMII 11 = RGMII for SW5-RGMII (Default)
25	LED3_0	Ipu/O	3	Port 3 LED Indicator 0: See Global Register 11 bits [5:4] for details. Strap Option: See LED3_1.

TABLE 2-1: SIGNALS - KSZ8795CLX (CONTINUED)

Pin Number	Pin Name	Type Note 2-1	Port	Description
26	VDD12D	P	—	1.2V Core Power.
27	GNDD	GND	—	Digital Ground.
28	LED4_1	Ipu/O	4	Port 4 LED Indicator 1: See Global Register 11 bits [5:4] for details.
29	TXEN5/ TXD5_CTL	Ipd	5	GMII/MII/RMII: Port 5 Switch transmit enable. RGMII: Transmit data control.
30	TXD5_0	Ipd	5	GMII/RGMII/MII/RMII: Port 5 switch transmit Bit[0].
31	LED4_0	Ipu/O	4	Port 4 LED Indicator 0: See Global Register 11 bits [5:4] for details.
32	TXD5_1	Ipd	5	GMII/RGMII/MII/RMII: Port 5 switch transmit Bit[1].
33	GNDD	GND	—	Digital Ground.
34	VDDIO	P	—	3.3V, 2.5V, or 1.8V digital VDD for digital I/O circuitry.
35	TXD5_2	Ipd	5	GMII/RGMII/MII: Port 5 switch transmit Bit[2]. RMII: No connection.
36	TXD5_3	Ipd	5	GMII/RGMII/MII: Port 5 switch transmit Bit[3]. RMII: No connection.
37	TXER5	Ipd	5	GMII/MII: Port 5 switch transmit error. RGMII/RMII: No connection.
38	TXD5_4	Ipd	5	GMII: Port 5 switch transmit Bit[4]. RGMII/MII/RMII: No connection.
39	TXD5_5	Ipd	5	GMII: Port 5 switch transmit Bit[5]. RGMII/MII/RMII: No connection.
40	TXD5_6	Ipd	5	GMII: Port 5 switch transmit Bit[6]. RGMII/MII/RMII: No connection.
41	TXD5_7	Ipd	5	GMII: Port 5 Switch transmit Bit[7]. RGMII/MII/RMII: No connection.
42	VDD12D	P	—	1.2V Core Power.
43	TXC5/ REFCLKI/ GTXC5	I/O	5	Port 5 Switch GMAC5 Clock Pin: MII: 2.5/25 MHz clock, PHY mode is output, MAC mode is input. RMII: Input for receiving 50 MHz clock in normal mode GMII: Input 125 MHz clock for the transmit RGMII: Input 125 MHz clock with falling and rising edge to latch data for the transmit.
44	RXC5/ GRXC5	I/O	5	Port 5 Switch GMAC5 Clock Pin: MII: 2.5/25 MHz clock, PHY mode is output, MAC mode is input. RMII: Output 50 MHz reference clock for the receiving/transmit in the clock mode. GMII: Output 125 MHz clock for the receiving. RGMII: Output 125 MHz clock with falling and rising edge to latch data for the receiving.

© 2016-2017 Microchip Technology Inc.

TABLE 2-1: SIGNALS - KSZ8795CLX (CONTINUED)

Pin Number	Pin Name	Type Note 2-1	Port	Description
45	RXD5_0	Ipd/O	5	GMII/RGMII/MII/RMII: Port 5 Switch receive Bit[0].
46	RXD5_1	Ipd/O	5	GMII/RGMII/MII/RMII: Port 5 Switch receive Bit[1].
47	GNDD	GND	—	Digital Ground.
48	VDDIO	P	—	3.3V, 2.5V, or 1.8V digital VDD for digital I/O circuitry.
49	RXD5_2	Ipd/O	5	GMII/RGMII/MII: Port 5 Switch receive Bit[2]. RMII: No connection
50	RXD5_3	Ipd/O	5	GMII/RGMII/MII: Port 5 Switch receive Bit[3]. RMII: No connection
51	RXDV5/ CRSDV5/ RXD5_CTL	Ipd/O	5	GMII/MII: RXDV5 is for Port 5 switch GMII/MII receive data valid. RMII: CRSDV5 is for Port 5 RMII carrier sense/receive data valid output. RGMII: RXD5_CTL is for Port 5 RGMII receive data control
52	RXER5	Ipd/O	5	GMII/MII: Port 5 Switch receive error. RGMII/RMII: No connection.
53	CRS5	Ipd/O	5	GMII/MII: Port 5 Switch MII modes carrier sense. RGMII/RMII: No connection.
54	COL5	Ipd/O	5	GMII/MII: Port 5 Switch MII collision detect. RGMII/RMII: No connection.
55	REFCLKO	Ipu/O	—	25 MHz Clock Output (Option) Controlled by the strap pin LED2_0 and the Global Register 11 Bit[1]. Default is enabled; it is better to disable it if it's not being used.
56	PME_N	I/O	—	Power Management Event This output signal indicates that a WoL event has been detected as a result of a wake-up frame being detected. The KSZ8795-CLX is requesting the system to wake up from low power mode. Its assertion polarity is programmable with the default polarity to be active-low.
57	RXD5_4	Ipd/O	5	GMII: Port 5 switch receive Bit[4]. RGMII/MI/RMII: No connection.
58	RXD5_5	Ipd/O	5	GMII: Port 5 switch receive Bit[5]. RGMII/MII/RMII: No connection.
59	RXD5_6	Ipd/O	5	GMII: Port 5 switch receive Bit[6]. RGMII/MII/RMII: No connection.
60	RXD5_7	Ipd/O	5	GMII: Port 5 switch receive Bit[7]. RGMII/MII/RMII: No connection.
61	GNDD	GND	—	Digital Ground.

TABLE 2-1: SIGNALS - KSZ8795CLX (CONTINUED)

Pin Number	Pin Name	Type Note 2-1	Port	Description
62	LED2_1	Ipu/O	2	Port 2 LED Indicator 1: See Global Register 11 bits [5:4] for details. Strap Option: Port 5 GMII/MII and RMII mode select When Port 5 is GMII/MII mode: PU = GMII/MII is in GMAC/MAC mode. (Default) PD = GMII/MII is in GPHY/PHY mode. **Note:** When set GMAC5 GMII to GPHY mode, the CRS and COL pins will change from the input to output. When set MII to PHY mode, the CRS, COL, RXC and TXC pins will change from the input to output. When Port 5 is RMII mode: PU = Clock mode in RMII, using 25MHz OSC clock and provide 50 MHz RMII clock from pin RXC5. PD = Normal mode in RMII, the TXC5/REFCLKI5 pin on the port 5 RMII will receive an external 50 MHz clock **Note:** Port 5 also can use either an internal or external clock in RMII mode based on this strap pin or the setting of the Register 86 (0x56) bit[7].
63	LED2_0	Ipu/O	2	Port 2 LED Indicator 0: See Global Register 11 bits [5:4] for details. Strap Option: REFCLKO enable PU = REFCLK_O (25 MHz) is enabled. (Default) PD = REFCLK_O is disabled. **Note:** It is better to disable this 25 MHz clock if not providing an extra 25 MHz clock for the system.
64	LED1_1	Ipu/O	1	Port 1 LED Indicator 1: See Global Register 11 bits [5:4] for details. Strap Option: PLL Clock source select PU = Still use 25 MHz clock from XI/XO pin even though it is in Port 5 RMII normal mode. PD = Use external clock from pin TXC5 in Port 5 RMII normal mode. **Note:** If received clock in Port 5 RMII normal mode has large clock jitter, one can select the 25 MHz crystal/oscillator as the switch's clock source.
65	LED1_0	Ipu/O	1	Port 1 LED Indicator 0: See Global Register 11 bits [5:4] for details. Strap Option: Speed select in GMII/RGMII PU = 1Gbps in GMII/RGMII.(Default) PD = 10/100Mbps in GMII/RGMII. **Note:** Programmable through internal registers also.
66	SPIQ	Ipd/O	All	SPI Serial Data Output in SPI Slave Mode: Strap Option: Serial bus configuration. PD = SPI slave mode. PU = MDC/MDIO mode. **Note:** An external pull-up or pull-down resistor is required.

© 2016-2017 Microchip Technology Inc.

TABLE 2-1: SIGNALS - KSZ8795CLX (CONTINUED)

Pin Number	Pin Name	Type Note 2-1	Port	Description
67	SCL_MDC	Ipu	All	Clock Input for SPI or MDC/MDIO Interface: Input clock up to 50 MHz in SPI slave mode. Input clock up to 25 MHz in MDC/MDIO for MIIM access.
68	SDA_MDIO	Ipu/O	All	Data for SPI or MDC/MDIO Interface: Serial data input in SPI slave mode. MDC/MDIO interface data input/output.
69	SPIS_N	Ipu	All	SPI Slave Mode Chip Select (Active-Low): SPI data transfer start in SPI slave mode. When SPIS_N is high, the KSZ8795CLX is deselected and SPIQ is held in the high impedance state. A high-to-low transition initiates the SPI data transfer. This pin is active-low.
70	VDDIO	P	—	3.3V, 2.5V or 1.8V digital VDD for digital I/O circuitry.
71	GNDD	GND	—	Digital Ground.
72	RST_N	Ipu	—	Reset: This active-low signal resets the hardware in the device. See the timing requirements in this section.
73	VDD12D	P	—	1.2V Core Power.
74	NC	NC	—	No Connect.
75	ATST	NC	—	No Connect. Factory test pin.
76	VDDAT	P	—	3.3V or 2.5V Analog Power.
77	ISET		—	Transmit Output Current Set: This pin configures the physical transmit output current. It should be connected to GND through a 12.4 kΩ 1% resistor.
78	GNDA	GND	—	Analog Ground.
79	XI	I	—	Crystal Clock Input/Oscillator Input: When using a 25 MHz crystal, this input is connected to one end of the crystal circuit. When using a 3.3V oscillator, this is the input from the oscillator. The crystal or oscillator should have a tolerance of ±50 ppm.
80	XO	O	—	Crystal Clock Output: When using a 25 MHz crystal, this output is connected to one end of the crystal circuit.

Note 2-1 P = power supply; GND = ground; I = input; O = output
I/O = bi-directional
Ipu = Input w/internal pull-up.
Ipd = Input w/internal pull-down.
Ipd/O = Input w/internal pull-down during reset, output pin otherwise.
Ipu/O = Input w/internal pull-up during reset, output pin otherwise.
OTRI = Output tri-stated.
PU = Strap pin pull-up.
PD = Strap pin pull-down.
NC = No connect or tie-to-ground for this product.

The KSZ8795CLX can function as a managed switch and utilizes strap-in pins to configure the device for different modes. The strap-in pins are configured by using external pull-up/down resistors to create a high or low state on the pins which are sampled during the power-down reset or warm reset. The functions are described in following table.

TABLE 2-2: STRAP-IN OPTIONS - KSZ8795CLX

Pin Number	Pin Name	Type (Note 2-2)	Description
24, 25	LED3[1,0]	Ipu/O	Switch Port 5 GMAC5 Interface Mode Select: Strap Option: 00 = MII for SW5-MII 01 = RMII for SW5-RMII 10 = GMII for SW5-GMII 11 = RGMII for SW5-RGMII (Default)
62	LED2_1	Ipu/O	Port 5 GMII/MII and RMII Mode Select: Strap Option: When Port 5 is GMII/MII mode: PU = GMII/MII is in GMAC/MAC mode. (Default) PD = GMII/MII is in GPHY/PHY mode. **Note:** When set GMAC5 GMII to GPHY mode, the CRS and COL pins will change from the input to output. When set MII to PHY mode, the CRS, COL, RXC and TXC pins will change from the input to output. When Port 5 is RMII mode: PU = Clock mode in RMII, using 25 MHz OSC clock and provide 50 MHz RMII clock from pin RXC5. PD = Normal mode in RMII, the TXC5/REFCLKI5 pin on the Port 5 RMII will receive an external 50 MHz clock **Note:** Port 5 also can use either an internal or external clock in RMII mode based on this strap pin or the setting of the Register 86 (0x56) bit[7].
63	LED2_0	Ipu/O	REFCLKO Enable: Strap Option: PU = REFCLK_O (25 MHz) is enabled. (Default) PD = REFCLK_O is disabled.
64	LED1_1	Ipu/O	PLL Clock Source Select: Strap Option: PU = Still use 25 MHz clock from XI/XO pin even though it is in Port 5 RMII normal mode. PD = Use external clock from TXC5 pin in Port 5 RMII normal mode. **Note:** If received clock in Port 5 RMII normal mode with bigger clock jitter, still can select to use the 25 MHz crystal/oscillator as switch's clock source.
65	LED1_0	Ipu/O	Port 5 Gigabit Select: Strap Option: PU = 1 Gbps in GMII/RGMII mode (Default) PD = 10/100 Mbps in GMII/RGMII mode. **Note:** Programmable through internal register also

© 2016-2017 Microchip Technology Inc.

TABLE 2-2: STRAP-IN OPTIONS - KSZ8795CLX (CONTINUED)

Pin Number	Pin Name	Type (Note 2-2)	Description
66	SPIQ	Ipd/O	Serial Bus Configuration Strap Option: PD = SPI slave mode. (Default) PU = MDC/MDIO mode. **Note:** An external pull-up or pull-down resistor is requested. If the uplink port is used for the RGMII interface, SPI mode is recommend for setting register 86 (0x56) bits [4:3] for RGMII v2.0; MDC/MDIO mode can't set this feature.

Note 2-2 Ipd/O = Input w/internal pull-down during reset, output pin otherwise.
Ipu/O = Input w/internal pull-up during reset, output pin otherwise.

3.0 FUNCTIONAL DESCRIPTION

The KSZ8795CLX contains four 10/100 physical layer transceivers, four media access control (MAC) units, and one Gigabit media access control (GMAC) unit with an integrated Layer 2-managed switch. The device runs in two modes. The first mode is as a four-port standalone switch and the second is as a five-port switch with fifth port that is provided through a Gigabit media independent interface that supports GMII, RGMII, MII, and RMII. This is useful for implementing an integrated broadband router.

The KSZ8795CLX has the flexibility to reside in a managed mode. In a managed mode, a host processor has complete control of the KSZ8795CLX via the SPI bus, or the MDC/MDIO interface.

On the media side, the KSZ8795CLX supports IEEE 802.3 10BASE-T, 100BASE-TX on all copper ports with Auto- MDI/MDI-X. The KSZ8795CLX can be used as a fully-managed five-port switch or hooked up to a microprocessor via its SW-GMII/RGMII/MII/RMII interfaces to allow for integrating into a variety of environments.

Physical signal transmission and reception are enhanced through the use of patented analog circuitry and DSP technology that makes the design more efficient and allows for reduced power consumption and smaller die size.

Major enhancements from the KSZ8995 and KS8895 to the KSZ8795CLX include more host interface options such as the GMII and RGMII interfaces, power-saving features such as IEEE 802.1az Energy Efficient Ethernet (EEE), MLD snooping, Wake-on-LAN (WoL), port-based ACL filtering for the port security, enhanced quality-of-service (QoS) priority, rapid spanning tree, IGMP snooping, port mirroring support, and flexible rate limiting.

3.1 Physical Layer (PHY)

3.1.1 100BASE-TX TRANSMIT

The 100BASE-TX transmit function performs parallel-to-serial conversion, 4B/5B coding, scrambling, NRZ-to-NRZI conversion, and MLT3 encoding and transmission. The circuit starts with a parallel-to-serial conversion, which converts the MII data from the MAC into a 125 MHz serial bit stream. The data and control stream is then converted into 4B/5B coding followed by a scrambler. The serialized data is further converted from NRZ-to-NRZI format, and then transmitted in MLT3 current output. The output current is set by an external 1% 12.4 kΩ resistor for the 1:1 transformer ratio. It has a typical rise/fall time of 4 ns and complies with the ANSI TP-PMD standard regarding amplitude balance, overshoot, and timing jitter. The wave-shaped 10BASE-T output is also incorporated into the 100BASE-TX transmitter.

3.1.2 100BASE-TX RECEIVE

The 100BASE-TX receiver function performs adaptive equalization, DC restoration, MLT3-to-NRZI conversion, data and clock recovery, NRZI-to-NRZ conversion, descrambling, 4B/5B decoding, and serial-to-parallel conversion. The receiving side starts with the equalization filter to compensate for inter-symbol interference (ISI) over the twisted pair cable. Since the amplitude loss and phase distortion is a function of the length of the cable, the equalizer has to adjust its characteristics to optimize the performance. In this design, the variable equalizer will make an initial estimation based on comparisons of incoming signal strength against some known cable characteristics, then tunes itself for optimization. This is an ongoing process and can self-adjust against environmental changes such as temperature variations.

The equalized signal then goes through a DC restoration and data conversion block. The DC restoration circuit is used to compensate for the effect of baseline wander and improve the dynamic range. The differential data conversion circuit converts the MLT3 format back to NRZI. The slicing threshold is also adaptive.

The clock recovery circuit extracts the 125 MHz clock from the edges of the NRZI signal. This recovered clock is then used to convert the NRZI signal into the NRZ format. The signal is then sent through the descrambler followed by the 4B/5B decoder. Finally, the NRZ serial data is converted to the MII format and provided as the input data to the MAC.

3.1.3 PLL CLOCK SYNTHESIZER

The KSZ8795CLX generates 125 MHz, 83 MHz, 41 MHz, 25 MHz, and 10 MHz clocks for system timing. Internal clocks are generated from an external 25 MHz crystal or oscillator.

3.1.4 SCRAMBLER/DE-SCRAMBLER (100BASE-TX ONLY)

The purpose of the scrambler is to spread the power spectrum of the signal in order to reduce EMI and baseline wander. The data is scrambled through the use of an 11-bit wide linear feedback shift register (LFSR). This can generate a 2047-bit non-repetitive sequence. The receiver will then descramble the incoming data stream with the same sequence at the transmitter.

© 2016-2017 Microchip Technology Inc.

3.1.5 10BASE-T TRANSMIT

The 10BASE-T output driver is incorporated into the 100BASE-T driver to allow transmission with the same magnetics. They are internally wave-shaped and pre-emphasized into outputs with a typical 2.3V amplitude. The harmonic contents are at least 27 dB below the fundamental when driven by an all-ones Manchester-encoded signal.

3.1.6 10BASE-T RECEIVE

On the receive side, input buffers and level detecting squelch circuits are employed. A differential input receiver circuit and a PLL perform the decoding function. The Manchester-encoded data stream is separated into a clock signal and NRZ data. A squelch circuit rejects signals with levels less than 400 mV or with short pulse widths in order to prevent noises at the RXP or RXM input from falsely triggering the decoder. When the input exceeds the squelch limit, the PLL locks onto the incoming signal and the KSZ8795CLX decodes a data frame. The receiver clock is maintained active during idle periods in between data reception.

3.1.7 MDI/MDI-X AUTO CROSSOVER

To eliminate the need for crossover cables between similar devices, the KSZ8795CLX supports HP Auto-MDI/MDI-X and IEEE 802.3u standard MDI/MDI-X auto crossover. Note that HP Auto-MDI/MDI-X is the default.

The auto-sense function detects remote transmit and receive pairs and correctly assigns transmit and receive pairs for the KSZ8795CLX device. This feature is extremely useful when end users are unaware of cable types, and also, saves on an additional uplink configuration connection. The auto-crossover feature can be disabled through the port control registers, or MIIM PHY registers. The IEEE 802.3u standard MDI and MDI-X definitions are illustrated in Table 3-1.

TABLE 3-1: MDI/MDI-X PIN DEFINITIONS

MDI		MDI-X	
RJ-45 Pins	**Signals**	**RJ-45 Pins**	**Signals**
1	TD+	1	RD+
2	TD–	2	RD–
3	RD+	3	TD+
6	RD–	6	TD–

3.1.7.1 Straight Cable

A straight cable connects an MDI device to an MDI-X device, or an MDI-X device to an MDI device. Figure 3-1 depicts a typical straight cable connection between a NIC card (MDI) and a switch, or hub (MDI-X).

FIGURE 3-1: TYPICAL STRAIGHT CABLE CONNECTION

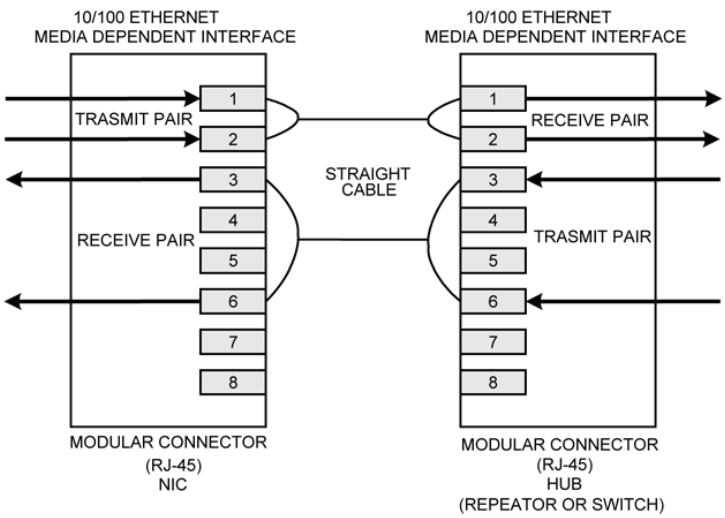

3.1.7.2 Crossover Cable

A crossover cable connects an MDI device to another MDI device, or an MDI-X device to another MDI-X device. The following diagram shows a typical crossover cable connection between two switches or hubs (two MDI-X devices).

FIGURE 3-2: TYPICAL CROSSOVER CABLE CONNECTION

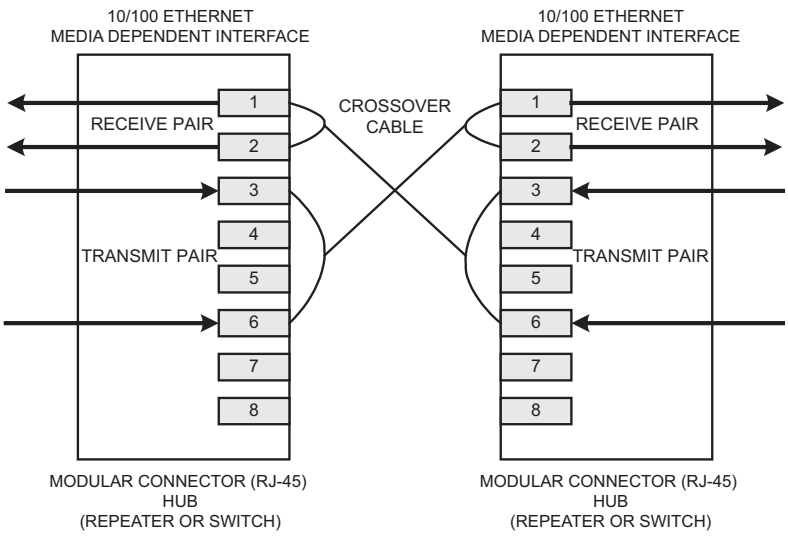

3.1.8 AUTO-NEGOTIATION

The KSZ8795CLX conforms to the auto-negotiation protocol as described by the 802.3 committee. Auto-negotiation allows unshielded twisted pair (UTP) link partners to select the highest common mode-of-operation. Link partners advertise their capabilities to each other and then compare their own capabilities with those they received from their link partners. The highest speed and duplex setting that is common to the two link partners is selected as the mode-of-operation. Auto-negotiation is supported for the copper ports only.

The following list shows the speed and duplex operation mode (highest to lowest):

- 100BASE-TX, full-duplex
- 100BASE-TX, half-duplex
- 10BASE-T, full-duplex
- 10BASE-T, half-duplex

If auto-negotiation is not supported or the KSZ8795CLX link partner is forced to bypass auto-negotiation, the KSZ8795-CLX sets its operating mode by observing the signal at its receiver. This is known as parallel detection, and allows the KSZ8795CLX to establish link by listening for a fixed-signal protocol in the absence of auto-negotiation advertisement protocol. The auto-negotiation link up process is shown in Figure 3-3.

© 2016-2017 Microchip Technology Inc.

FIGURE 3-3: AUTO-NEGOTIATION AND PARALLEL OPERATION

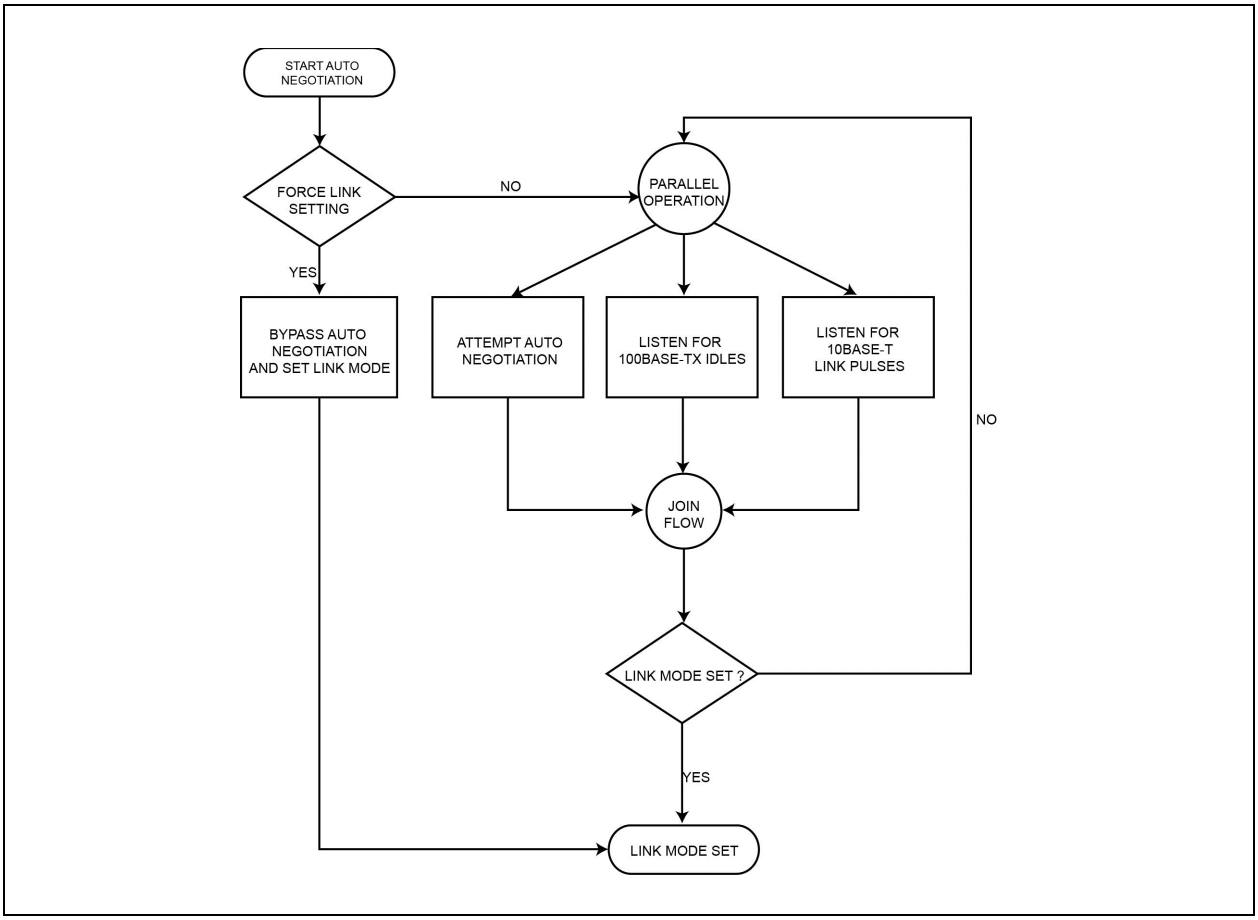

3.1.9 LINKMD® CABLE DIAGNOSTICS

The LinkMD feature utilizes time-domain reflectometry (TDR) to analyze the cabling plant for common cabling problems such as open circuits, short circuits, and impedance mismatches.

LinkMD works by sending a pulse of known amplitude and duration down the MDI and MDI-X pairs and then analyzes the shape of the reflected signal. Timing the pulse duration gives an indication of the distance to the cabling fault with maximum distance of 200m and accuracy of ±2m. Internal circuitry displays the TDR information in a user-readable digital format.

Note: Cable diagnostics are only valid for copper connections only.

3.1.9.1 Access

LinkMD is initiated by accessing the PHY special control/status Registers 26, 42, 58, 74 and the LinkMD result Registers 27, 43, 59, and 75 for Ports 1, 2, 3, and 4 respectively; and in conjunction with the Port Control 10 Register for Ports 1, 2, 3, and 4 respectively to disable Auto-MDI/MDI-X.

Alternatively, the MIIM PHY Registers 0 and 1d can also be used for LinkMD access.

3.1.9.2 Usage

The following is a sample procedure for using LinkMD with Registers {26, 27, and 29} on Port 1:

1. Disable auto MDI/MDI-X by writing a ‘1’ to Register 29, Bit[2] to enable manual control over the differential pair used to transmit the LinkMD pulse.
2. Start cable diagnostic test by writing a ‘1’ to Register 26, Bit[4]. This enable bit is self-clearing.
3. Wait (poll) for Register 26, Bit[4] to return a ‘0’, and indicating cable diagnostic test is completed.
4. Read cable diagnostic test results in Register 26, bits [6:5]. The results are as follows:

00 = normal condition (valid test)

01 = open condition detected in cable (valid test)

10 = short condition detected in cable (valid test)

11 = cable diagnostic test failed (invalid test)

The ‘11’ case, invalid test, occurs when the KSZ8795CLX is unable to shut down the link partner. In this instance, the test is not run, since it would be impossible for the KSZ8795CLX to determine if the detected signal is a reflection of the signal generated or a signal from another source.

5. Get distance to fault by concatenating Register 26, bit[0] and Register 27, bits [7:0]; and multiplying the result by a constant of 0.4. The distance to the cable fault can be determined by the following formula:

   D (distance to cable fault, expressed in meters) = 0.4 x (Register 26, Bit[0], Register 27, bits [7:0])

Concatenated value of Registers 26 Bit[0] and 27 bits [7:0] should be converted to decimal before multiplying by 0.4.

The constant (0.4) may be calibrated for different cabling conditions, including cables with a velocity of propagation that varies significantly from the norm.

For Ports 2, 3, 4, and using the MIIM PHY registers, LinkMD usage is similar.

3.1.9.3 A LinkMD Example

The following is a sample procedure for using LinkMD on Ports 1, 2, 3, and 4 with force MDI-X mode:

```
//Disable MDI/MDI-X and force to MDI-X mode
//’w’ is WRITE the register. ‘r’ is READ register below
w 1d 04
w 2d 04
w 3d 04
w 4d 04
//Set Internal registers temporary by indirect registers, adjust for LinkMD
w 6e a0
w 6f 4d
w a0 80
//Enable LinkMD Testing with fault cable for Ports 1, 2, 3 and 4
w 1a 10
w 2a 10
w 3a 10
w 4a 10
//Wait until Port Register Control 8 Bit[4] returns a ‘0’ (Self Clear)
//Diagnosis results
r 1a
r 1b
r 2a
r 2b
r 3a
r 3b
r 4a
r 4b
//For example on Port 1, the result analysis based on the values of the register 0x1a and 0x1b
//The register 0x1a Bits[6-5] are for the open or the short detection.
//The register 0x1a Bit[0] + the register 0x1b bits [7-0] = CDT_Fault_Count [8-0]
//The distance to fault is about 0.4 x (CDT_Fault_Count [8-0])
```


© 2016-2017 Microchip Technology Inc.

3.1.10 ON-CHIP TERMINATION AND INTERNAL BIASING

The KSZ8795CLX reduces the board cost and simplifies the board layout by using on-chip termination resistors for all ports and RX/TX differential pairs without the external termination resistors. The combination of the on-chip termination and the internal biasing will save more PCB spacing and power consumption, compared using external biasing and termination resistors for multiple switches, because the transformers don't consume the power anymore. The center taps of the transformer shouldn't need to be tied to the analog power.

3.2 Media Access Controller (MAC) Operation

The KSZ8795CLX strictly abides by IEEE 802.3 standards to maximize compatibility.

3.2.1 INTER-PACKET GAP (IPG)

If a frame is successfully transmitted, the 96-bit time IPG is measured between the two consecutive MTXEN. If the current packet is experiencing collision, the 96-bit time IPG is measured from MCRS and the next MTXEN.

3.2.2 BACKOFF ALGORITHM

The KSZ8795CLX implements the IEEE Standard 802.3 binary exponential backoff algorithm, and optional "aggressive mode" backoff. After 16 collisions, the packet will be optionally dropped, depending on the chip configuration in Register 3.

3.2.3 LATE COLLISION

If a transmit packet experiences collisions after 512-bit times of the transmission, the packet will be dropped.

3.2.4 ILLEGAL FRAMES

The KSZ8795CLX discards frames less than 64 bytes and can be programmed to accept frames up to 1536 bytes in Register 4. For special applications, the KSZ8795CLX can also be programmed to accept frames up to 2K bytes in Register 3 Bit[6]. Since the KSZ8795CLX supports VLAN tags, the maximum sizing is adjusted when these tags are present.

3.2.5 FLOW CONTROL

The KSZ8795CLX supports standard 802.3x flow control frames on both transmit and receive sides.

On the receive side, if the KSZ8795CLX receives a pause control frame, the KSZ8795CLX will not transmit the next normal frame until the timer, specified in the pause control frame, expires. If another pause frame is received before the current timer expires, the timer will be updated with the new value in the second pause frame. During this period (being flow controlled), only flow-control packets from the KSZ8795CLX will be transmitted.

On the transmit side, the KSZ8795CLX has intelligent and efficient ways to determine when to invoke flow control. The flow control is based on availability of the system resources, including available buffers, available transmit queues and available receive queues.

The KSZ8795CLX flow controls a port that has just received a packet if the destination port resource is busy. The KSZ8795CLX issues a flow control frame (XOFF), containing the maximum pause time defined in IEEE standard 802.3x. Once the resource is freed up, the KSZ8795CLX sends out the other flow control frame (XON) with zero pause time to turn off the flow control (turn on transmission to the port). A hysteresis feature is also provided to prevent over-activation and deactivation of the flow control mechanism.

The KSZ8795CLX flow controls all ports if the receive queue becomes full.

3.2.6 HALF-DUPLEX BACK PRESSURE

The KSZ8795CLX also provides a half-duplex back pressure option (note that this is not in IEEE 802.3 standards). The activation and deactivation conditions are the same as the ones given for full-duplex mode. If back pressure is required, the KSZ8795CLX sends preambles to defer the other station's transmission (carrier sense deference). To avoid jabber and excessive deference as defined in IEEE 802.3 standards, after a certain period of time, the KSZ8795CLX discontinues carrier sense but raises it quickly after it drops packets to inhibit other transmissions. This short silent time (no carrier sense) is to prevent other stations from sending out packets and keeps other stations in a carrier sense-deferred state. If the port has packets to send during a back pressure situation, the carrier sense-type back pressure is interrupted and those packets are transmitted instead. If there are no more packets to send, carrier sense-type back pressure becomes active again until switch resources are free. If a collision occurs, the binary exponential backoff algorithm is

skipped and carrier sense is generated immediately, reducing the chance of further colliding and maintaining carrier sense to prevent reception of packets. To ensure no packet loss in 10BASE-T or 100BASE-TX half-duplex modes, the user must enable the following:

- Aggressive backoff (Register 3, Bit[0])
- No excessive collision drop (Register 4, Bit[3])
- Back pressure (Register 4, Bit[5])

These bits are not set as the default because this is not the IEEE standard.

3.2.7 BROADCAST STORM PROTECTION

The KSZ8795CLX has an intelligent option to protect the switch system from receiving too many broadcast packets. Broadcast packets are normally forwarded to all ports except the source port and thus use too many switch resources (bandwidth and available space in transmit queues). The KSZ8795CLX has the option to include “multicast packets” for storm control. The broadcast storm rate parameters are programmed globally and can be enabled or disabled on a per port basis. The rate is based on a 50 ms (0.05s) interval for 100BT and a 500 ms (0.5s) interval for 10BT. At the beginning of each interval, the counter is cleared to zero and the rate limit mechanism starts to count the number of bytes during the interval. The rate definition is described in Registers 6 and 7. The default setting for Registers 6 and 7 is 0x4A (74 decimal). This is equal to a rate of 1%, calculated as follows:

148.80 frames/sec x 50 ms (0.05s)/interval x 1% = 74 frames/interval (approx.) = 0x4A

3.3 Switch Core

3.3.1 ADDRESS LOOK-UP

The internal look-up table stores MAC addresses and their associated information. It contains a 1K unicast address table plus switching information. The KSZ8795CLX is guaranteed to learn 1K addresses and distinguishes itself from a hash-based look-up table, which, depending on the operating environment and probabilities, may not guarantee the absolute number of addresses it can learn.

3.3.2 LEARNING

The internal look-up engine updates its table with a new entry if the following conditions are met:

- The received packet’s source address (SA) does not exist in the look-up table.
- The received packet is good; the packet has no receiving errors and is of legal length.

The look-up engine inserts the qualified SA into the table, along with the port number and time stamp. If the table is full, the last entry of the table is deleted first to make room for the new entry.

3.3.3 MIGRATION

The internal look-up engine also monitors whether a station is moved. If this occurs, it updates the table accordingly. Migration happens when the following conditions are met:

- The received packet’s SA is in the table but the associated source port information is different.
- The received packet is good; the packet has no receiving errors and is of legal length.

The look-up engine will update the existing record in the table with the new source port information.

3.3.4 AGING

The look-up engine will update the time stamp information of a record whenever the corresponding SA appears. The time stamp is used in the aging process. If a record is not updated for a period of time, the look-up engine will remove the record from the table. The look-up engine constantly performs the aging process and will continuously remove aging records. The aging period is 300s (±75s). This feature can be enabled or disabled through Register 3 Bit[2].

3.3.5 FORWARDING

The KSZ8795CLX will forward packets using an algorithm that is depicted in the following flowcharts. Figure 3-4 shows stage one of the forwarding algorithm where the search engine looks up the VLAN ID, static table, and dynamic table for the destination address, and comes up with “port to forward 1” (PTF1). PTF1 is then further modified by the spanning tree, IGMP snooping, port mirroring, and port VLAN processes and authentication to come up with “port to forward 2” (PTF2), as shown in Figure 3-4. The authentication and ACL have highest priority in the forwarding process; ACL result will overwrite the result of the forwarding process. This is where the packet will be sent.

© 2016-2017 Microchip Technology Inc.

The KSZ8795CLX will not forward the following packets:

- Error packets. These include framing errors, frame check sequence (FCS) errors, alignment errors, and illegal size packet errors.
- IEEE802.3x PAUSE frames. KSZ8795CLX intercepts these packets and performs full duplex flow control accordingly.
- "Local" packets. Based on destination address (DA) lookup, if the destination port from the lookup table matches the port from which the packet originated, the packet is defined as "local."

FIGURE 3-4: DESTINATION ADDRESS LOOKUP AND RESOLUTION FLOW CHART

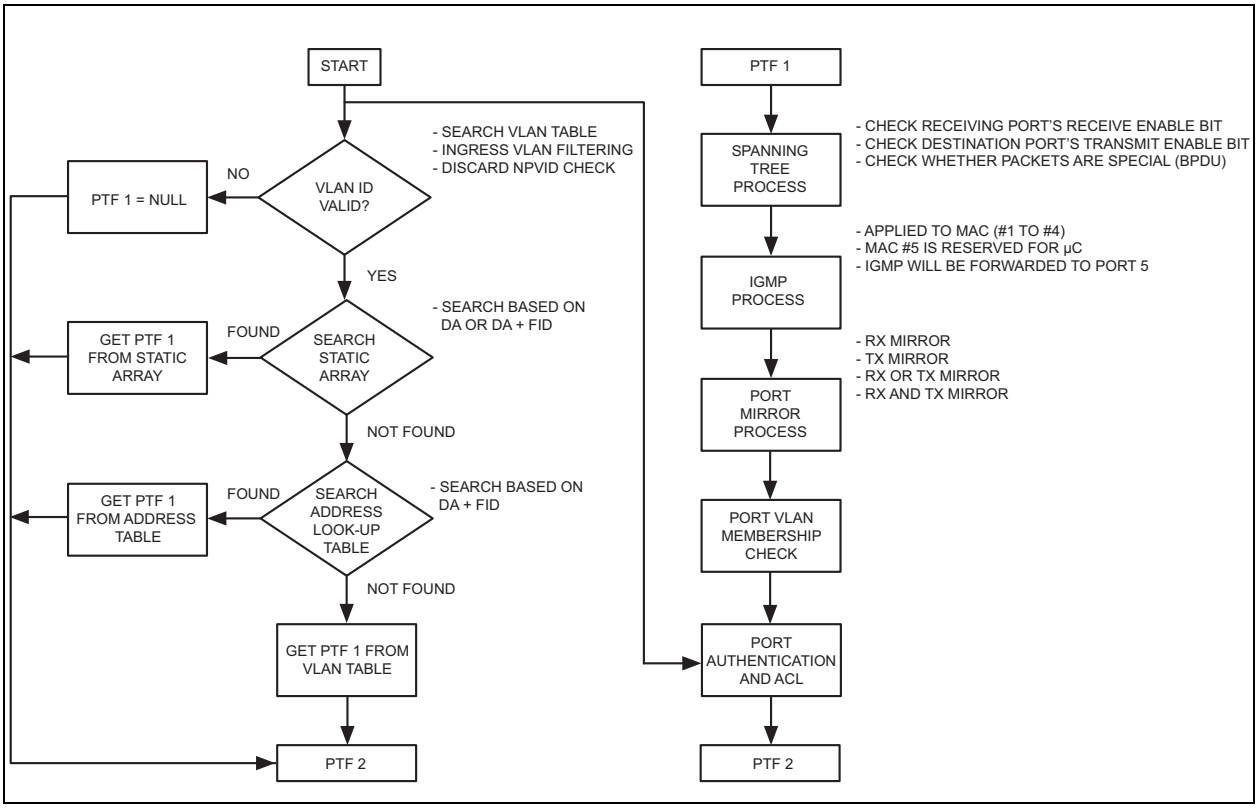

3.3.6 SWITCHING ENGINE

The KSZ8795CLX features a high-performance switching engine to move data to and from the MAC's packet buffers. It operates in store and forward mode, while the efficient switching mechanism reduces overall latency. The KSZ8795-CLX has a 64 kB internal frame buffer. This resource is shared between all five ports. There are a total of 512 buffers available. Each buffer is sized at 128 bytes.

3.4 Power and Power Management

The KSZ8795CLX device requires 3.3V analog power. An external 1.2V LDO provides the necessary 1.2V to power the analog and digital logic cores. The various I/Os can be operated at 1.8V, 2.5V, and 3.3V. Table 3-2 illustrates the various voltage options and requirements of the device.

TABLE 3-2: KSZ8795CLX VOLTAGE OPTIONS AND REQUIREMENTS

Power Signal Name	Device Pin	Requirement
VDDAT	2, 12, 76	3.3V or 2.5V input power to the analog blocks of transceiver in the device.
VDDIO	34, 48, 70	Choice of 1.8V or 2.5V or 3.3V for the I/O circuits. These input power pins power the I/O circuitry of the device.

TABLE 3-2: KSZ8795CLX VOLTAGE OPTIONS AND REQUIREMENTS (CONTINUED)

Power Signal Name	Device Pin	Requirement
VDD12A	1	1.2V core power. Filtered 1.2V input voltage. These pins feed 1.2V to power the internal analog and digital cores.
VDD12D	26, 42, 73	
GNDA	3, 21, 78	Analog ground.
GNDD	27, 33, 47, 61, 71	Digital ground.

The KSZ8795CLX supports enhanced power management in a low power state, with energy detection to ensure low power dissipation during device idle periods. There are multiple operation modes under the power management function which are controlled by the Register 14 Bits[4:3] and the Port Control 10 Register Bit[3] as:

- Register 14 Bits[4:3] = 00 Normal Operation Mode
- Register 14 Bits[4:3] = 01 Energy Detect Mode
- Register 14 Bits[4:3] = 10 Soft Power-Down Mode
- Register 14 Bits[4:3] = 11 Reserved

The Port Control 10 Register 29, 45, 61, 77 Bit[3] = 1 are for the port-based power-down mode. Table 3-3 indicates all internal function blocks' status under four different power management operation modes.

TABLE 3-3: INTERNAL FUNCTION BLOCK STATUS

KSZ8795CLX Function Blocks	Power Management Operation Modes		
	Normal Mode	Energy Detect Mode	Soft Power-Down Mode
Internal PLL Clock	Enabled	Disabled	Disabled
TX/RX PHY	Enabled	Energy Detect at RX	Disabled
MAC	Enabled	Disabled	Disabled
Host Interface	Enabled	Disabled	Disabled

3.4.1 NORMAL OPERATION MODE

This is the default setting Bits[4:3] = 00 in Register 14 after chip power-up or hardware reset. When KSZ8795CLX is in normal operation mode, all PLL clocks are running, PHY and MAC are on, and the host interface is ready for CPU read or writes.

During normal operation mode, the host CPU can set the Bits [4:3] in Register 14 to change the current normal operation mode to any one of the other three power management operation modes.

3.4.2 ENERGY DETECT MODE

Energy detect mode provides a mechanism to save more power than in the normal operation mode when the KSZ8795-CLX port is not connected to an active link partner. In this mode, the device will save more power when the cables are unplugged. If the cable is not plugged in, the device can automatically enter a low power state: the energy detect mode. In this mode, the device will keep transmitting 120 ns width pulses at a rate of 1 pulse per second. Once activity resumes due to plugging a cable in or attempting by the far end to establish link, the device can automatically power up to normal power state in energy detect mode.

Energy detect mode consists of two states, normal power state and low-power state. While in low power state, the device reduces power consumption by disabling all circuitry except the energy-detect circuitry of the receiver. The energy detect mode is entered by setting bits [4:3] = 01 in Register 14. When the KSZ8795CLX is in this mode, it will monitor the cable energy. If there is no energy on the cable for a time longer than the pre-configured value at bits [7:0] Go-Sleep time in Register 15, KSZ8795CLX will go into low power state. When KSZ8795CLX is in low power state, it will keep monitoring the cable energy. Once the energy is detected from the cable, the device will enter normal power state. When the device is at normal power state, it is able to transmit or receive packet from the cable.

3.4.3 SOFT POWER-DOWN MODE

The soft power-down mode is entered by setting bits [4:3] = 10 in Register 14. When KSZ8795CLX is in this mode, all PLL clocks are disabled, also all of PHYs and the MACs are off. Any dummy host access will wake-up this device from current soft power down mode to normal operation mode and internal reset will be issued to make all internal registers go to the default values.

© 2016-2017 Microchip Technology Inc.

3.4.4 PORT-BASED POWER-DOWN MODE

In addition, the KSZ8795CLX features a per-port power down mode. To save power, a PHY port that is not in use can be powered down via the Port Control 10 Register Bit[3], or MIIM PHY Register 0 Bit[11].

3.4.5 ENERGY EFFICIENT ETHERNET (EEE)

Along with supporting different types of power saving modes (H/W power down, S/W power down, and energy detect mode), the KSZ8795CLX extends the green function capability by supporting Energy Efficient Ethernet (EEE) features defined in IEEE P802.3az, March 2010. Both 10BASE-T and 100BASE-TX EEE functions are supported in KSZ8795-CLX. In 100BASE-TX the EEE operation is asymmetric on the same link, which means one direction could be at low-power idle (LPI) state, in the meanwhile, another direction could exist packet transfer activity. Different from other type of power saving mode, EEE is able to maintain the link while power saving is achieved. Based on EEE specification, the energy saving from EEE is done at PHY level. KSZ8795CLX reduces the power consumption not only at PHY level but also at MAC and switch level by shutting down the unused clocks as much as possible when the device is at low-power idle phase.

The KSZ8795CLX supports the 802.3az IEEE standard for both 10 Mbps and 100 Mbps interfaces. The EEE capability combines Switch, MAC, and PHY to support operation in the LPI mode. When the LPI mode is enabled, systems on both sides of the link can save power during periods of low link utilization.

EEE implementation provides a protocol to coordinate transitions to or from lower power consumption without changing the link status and without dropping or corrupting frames. The transition time into and out of the lower power consumption is kept small enough to be transparent to upper layer protocols and applications. EEE specifies means to exchange capabilities between link partners to determine whether EEE is supported and to select the best set of parameters common to both sides.

Besides supporting the 100BASE-TX PHY EEE, KSZ8795CLX also supports 10BASE-T with reduced transmit amplitude requirements for 10 Mbps mode to allow a reduction in power consumption.

FIGURE 3-5: IEEE TRANSMIT AND RECEIVE SIGNALING PATHS

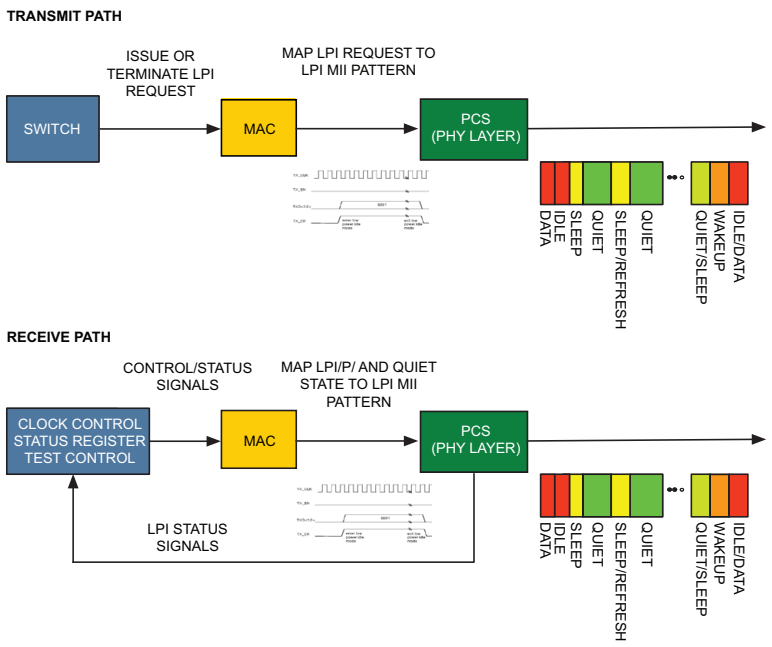

3.4.5.1 LPI Signaling

LPI signaling allows switch to indicate to the PHY, and to the link partner, that a break in the data stream is expected, and switch can use this information to enter power-saving modes that require additional time to resume normal operation. LPI signaling also informs the switch when the link partner has sent such an indication. The definition of LPI signaling uses of the MAC for simplified full duplex operation (with carrier sense deferral). This provides full duplex operation but uses the carrier sense signal to defer transmission when the PHY is in the LPI mode.

The decision on when to signal LPI (LPI request) to the link partner is made by the switch and communicated to the PHY through MAC MII interface. The switch is also informed when the link partner is signaling LPI, indication of LPI activation (LPI indication) on the MAC interface. The conditions under which switch decides to send LPI, and what actions are taken by switch when it receives LPI from the link partner, are specified in implementation section.

3.4.5.2 LPI Assertion

Without LPI assertion, the normal traffic transition continues on the MII interface. As soon as an LPI request is asserted, the LPI assert function starts to transmit the “Assert LPI” encoding on the MII and stop the MAC from transmitting normal traffic. Once the LPI request is de-asserted, the LPI assert function starts to transmit the normal inter-frame encoding on the MII again. After a delay, the MAC is allowed to start transmitting again. This delay is provided to allow the link partner to prepare for normal operation. Figure 3-6 illustrates the EEE LPI between two active data idles.

3.4.5.3 LPI Detection

In the absence of “Assert LPI” encoding on the receive MII, the LPI detect function maps the receive MII signals as normal conditions. At the start of LPI, indicated by the transition from normal inter-frame encoding to the “Assert LPI” encoding on the receive MII, the LPI detect function continues to indicate idle on interface, and asserts LP_IDLE indication. At the end of LPI, indicated by the transition from the “Assert LPI” encoding to any other encoding on the receive MII, LP_IDLE indication is de-asserted and the normal decoding operation resumes.

3.4.5.4 PHY LPI Transmit Operation

When the PHY detects the start of “Assert LPI” encoding on the MII, the PHY signals sleep to its link partner to indicate that the local transmitter is entering LPI mode. The EEE capability requires the PHY transmitter to go quiet after sleep is signaled. LPI requests are passed from one end of the link to the other and system energy savings can be achieved even if the PHY link does not go into a low power mode.

The transmit function of the local PHY is periodically enabled in order to transmit refresh signals that are used by the link partner to update adaptive filters and timing circuits. This maintains link integrity. This quiet-refresh cycle continues until the reception of the normal inter-frame encoding on the MII. The transmit function in the PHY communicates this to the link partner by sending a wake signal for a predefined period of time. The PHY then enters the normal operating state. No data frames are lost or corrupted during the transition to or from the LPI mode.

In 100BT/full-duplex EEE operation, refresh transmission are used to maintain link and the quiet periods are used for the power saving. Approximately, every 20 ms to 22 ms a refresh of 200 µs to 220 µs is sent to the link partner. The refresh transmission and quiet periods are shown in Figure 3-6.

© 2016-2017 Microchip Technology Inc.

FIGURE 3-6: TRAFFIC ACTIVITY AND EEE LPI OPERATIONS

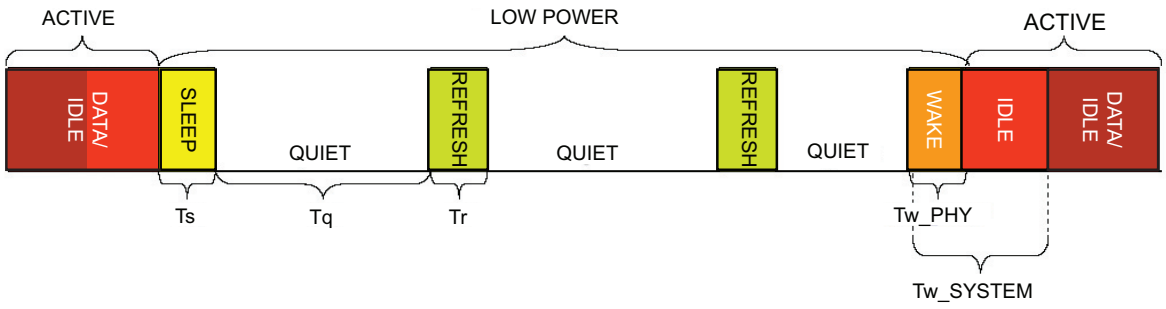

Ts = THE PERIOD OF TIME THAT THE PHY TRANSMITS THE SLEEP SIGNAL BEFORE TURNING ALL TRANSMITTERS OFF, 200 ≤ Ts ≤ 220 USED IN 100BASE-TX.
Tq = THE PERIOD OF TIME THAT THE PHY REMAINS QUIET BEFORE SENDING THE REFRESH SIGNAL, 20_000 ≤ Tq ≤ 22_000 USED IN 100BASE-TX.
Tr = DURATION OF THE REFRESH SIGNAL, 200 ≤ Tr ≤ 220 USED IN 100BASE-TX.

3.4.5.5 PHY LPI Receive Operation

On receive, entering the LPI mode is triggered by the reception of a sleep signal from the link partner, which indicates that the link partner is about to enter the LPI mode. After sending the sleep signal, the link partner ceases transmission. When the receiver detects the sleep signal, the local PHY indicates “Assert LPI” on the MII and the local receiver can disable some functionality to reduce power consumption. The link partner periodically transmits refresh signals that are used by the local PHY. This quiet-refresh cycle continues until the link partner initiates transition back to normal mode by transmitting the wake signal for a predetermined period of time controlled by the LPI assert function. This allows the local receiver to prepare for normal operation and transition from the “Assert LPI” encoding to the normal inter-frame encoding on the MII. After a system specified recovery time, the link supports the nominal operational data rate.

3.4.5.6 Negotiation with EEE Capability

The EEE capability shall be advertised during the Auto-Negotiation stage. Auto-Negotiation provides a linked device with the capability to detect the abilities supported by the device at the other end of the link, determine common abilities, and configure for joint operation. Auto-Negotiation is performed at power up or reset, on command from management, due to link failure, or due to user intervention.

During Auto-Negotiation, both link partners indicate their EEE capabilities. EEE is supported only if during Auto-Negotiation both the local device and link partner advertise the EEE capability for the resolved PHY type. If EEE is not supported, all EEE functionality is disabled and the LPI client does not assert LPI. If EEE is supported by both link partners for the negotiated PHY type, then the EEE function can be used independently in either direction.

3.4.6 WAKE-ON-LAN (WOL)

Wake-on-LAN (WoL) allows a computer to be turned on or woken up by a network message. The message is usually sent by a program executed on another computer on the same local area network. Wake-up frame events are used to wake the system whenever meaningful data is presented to the system over the network. Examples of meaningful data include the reception of a Magic Packet™, a management request from a remote administrator, or simply network traffic directly targeted to the local system. The KSZ8795CLX can be programmed to notify the host of the wake-up frame detection with the assertion of the interrupt signal (INTR_N) or assertion of the power management event signal (PME). The PME control is by PME indirect registers.

KSZ8795CLX MAC supports the detection of the following wake-up events:

- Detection of energy signal over a pre-configured value: Port PME Control Status Register Bit[0] in PME indirect registers.
- Detection of a link-up in the network link state: Port PME Control Status Register Bit[1] in the PME indirect registers.
- Receipt of a Magic Packet: Port PME Control Status Register Bit[2] in the PME indirect registers.

There are also other types of wake-up events that are not listed here as manufacturers may choose to implement these in their own ways.

3.4.6.1 Direction of Energy

The energy is detected from the cable and is continuously presented for a time longer than pre-configured value, especially when this energy change may impact the level at which the system should re-enter to the normal power state.

3.4.6.2 Direction of Link-Up

Link status wake events are useful to indicate a linkup in the network's connectivity status.

3.4.6.3 Magic Packet

The Magic Packet is a broadcast frame containing anywhere within its payload 6 bytes of all 1s (FF FF FF FF FF FF) followed by sixteen repetitions of the target computer's 48-bit DA MAC address. Since the magic packet is only scanned for the above string, and not actually parsed by a full protocol stack, it may be sent as any network- and transport-layer protocol.

Magic Packet technology is used to remotely wake up a sleeping or powered off PC on a LAN. This is accomplished by sending a specific packet of information, called a Magic Packet frame, to a node on the network. When a PC capable of receiving the specific frame goes to sleep, it enables the Magic Packet RX mode in the LAN controller, and when the LAN controller receives a Magic Packet frame, it will alert the system to wake up. Once the KSZ8795CLX has been enabled for Magic Packet Detection in Port PME Control Mask Register Bit[2] in the PME indirect register, it scans all incoming frames addressed to the node for a specific data sequence, which indicates to the controller this is a Magic Packet frame.

A Magic Packet frame must also meet the basic requirements for the LAN technology chosen, such as source address (SA), destination address (DA), which may be the receiving station's IEEE MAC address, or a multicast or broadcast address and CRC. The specific sequence consists of 16 duplications of the MAC address of this node, with no breaks or interruptions. This sequence can be located anywhere within the packet, but must be preceded by a synchronization stream. The synchronization stream is defined as 6 bytes of 0xFF. The device will also accept a broadcast frame, as long as the 16 duplications of the IEEE address match the address of the machine to be awakened.

<u>Example of Magic Packet:</u>

If the IEEE address for a particular node on a network is 11h 22h, 33h, 44h, 55h, 66h, the LAN controller would be scanning for the data sequence (assuming an Ethernet frame):

DA - SA - TYPE - FF FF FF FF FF FF - 11 22 33 44 55 66 -11 22 33 44 55 66-11 22 33 44 55 66 - 11 22 33 44 55 66 - 11 22 33 44 55 66 - 11 22 33 44 55 66 - 11 22 33 44 55 66 - 11 22 33 44 55 66 -11 22 33 44 55 66 - 11 22 33 44 55 66 - 11 22 33 44 55 66 - 11 22 33 44 55 66 - 11 22 3344 55 66 - 11 22 33 44 55 66 - 11 22 33 44 55 66 -MISC-CRC.

There are no further restrictions on a Magic Packet frame. For instance, the sequence could be in a TCP/IP packet or an IPX packet. The frame may be bridged or routed across the network without affecting its ability to wake-up a node at the frame's destination. If the scans do not find the specific sequence shown above, it discards the frame and takes no further action. If the KSZ8795CLX detects the data sequence, however, it then alerts the PC's power management circuitry (assert the PME pin) to wake-up the system.

3.4.7 INTERRUPT (INT_N/PME_N)

INT_N is an interrupt signal that is used to inform the external controller that there has been a status update in the KSZ8795CLX interrupt status register. Bits [3:0] of Register 125 are the interrupt mask control bits to enable and disable the conditions for asserting the INT_N signal. Bits [3:0] of Register 124 are the interrupt status bits to indicate which interrupt conditions have occurred. The interrupt status bits are cleared after reading those bits in the Register 124.

PME_N is an optional PME interrupt signal that is used to inform the external controller that there has been a status update in the KSZ8795CLX interrupt status register. Bits [4] of Register 125 are the PME mask control bits to enable and disable the conditions for asserting the PME_N signal. Bits [4] of Register 124 are the PME interrupt status bits to indicate which PME interrupt conditions have occurred. The PME interrupt status Bit[4] is cleared after reading this bit of the Register 124.

Additionally, the interrupt pins of INT_N and PME_N eliminate the need for the processor to poll the switch for status change.

© 2016-2017 Microchip Technology Inc.

3.5 Interfaces

The KSZ8795CLX device incorporates a number of interfaces to enable it to be designed into a standard network environment as well as a vendor unique environment. The available interfaces are summarized in Table 3-4. The detail of each usage in this table is provided in the sections that follow.

TABLE 3-4: AVAILABLE INTERFACES

Interface	Type	Usage	Registers Accessed
SPI	Configuration and Register Access	[As Slave Serial Bus] - External CPU or controller can R/W all internal registers thru this interface.	All
MIIM	Configuration and Register Access	MDC/MDIO capable CPU or controllers can R/W 4 PHYs registers.	PHYs Only
GMII	Data Flow	Interface to the Port 5 GMAC using the standard GMII timing.	N/A
MII	Data Flow	Interface to the Port 5 GMAC using the standard MII timing.	N/A
RGMII	Data Flow	Interface to the Port 5 GMAC using the faster reduced GMII timing.	N/A
RMII	Data Flow	Interface to the Port 5 GMAC using the faster reduced MII timing.	N/A

3.5.1 CONFIGURATION INTERFACE

3.5.1.1 SPI Slave Serial Bus Configuration

The KSZ8795CLX can also act as an SPI slave device. Through the SPI, the entire feature set can be enabled, including “VLAN,” “IGMP snooping,” “MIB counters,” etc. The external SPI master device can access any registers randomly in the data sheet shown. The SPI mode can configure all the desired settings including indirect registers and tables. KSZ8795 default is in the ‘start switch’ mode with the register 1 bit [0] =’1’, to disable the switch, write a "0" to Register 1 bit [0].

Two standard SPI commands are supported (00000011 for “READ DATA,” and 00000010 for “WRITE DATA”). To speed configuration time, the KSZ8795CLX also supports multiple reads or writes. After a byte is written to or read from the KSZ8795CLX, the internal address counter automatically increments if the SPI slave select signal (SPIS_N) continues to be driven low. If SPIS_N is kept low after the first byte is read, the next byte at the next address will be shifted out on SPIQ. If SPIS_N is kept low after the first byte is written, bits on the master out slave input (SPID) line will be written to the next address. Asserting SPIS_N high terminates a read or write operation. This means that the SPIS_N signal must be asserted high and then low again before issuing another command and address. The address counter wraps back to zero once it reaches the highest address. Therefore the entire register set can be written to or read from by issuing a single command and address.

The KSZ8795CLX is able to support SPI bus up to a maximum of 50 MHz. A high-performance SPI master is recommended to prevent internal counter overflow.

To use the KSZ8795CLX SPI:

1. At the board level, connect the KSZ8795CLX pins as detailed in Table 3-5.
2. Configure the serial communication to SPI slave mode by pulling down pin SPIQ with a pull-down resistor.
3. Write configuration data to registers using a typical SPI write data cycle as shown in Figure 3-7 or SPI multiple write as shown in Figure 3-8. Note that data input on SDA is registered on the rising edge of SCL clock.
4. Registers can be read and the configuration can be verified with a typical SPI read data cycle as shown in Figure 3-7 or a multiple read as shown in Figure 3-8. Note that read data is registered out of SPIQ on the falling edge of SCL clock.

TABLE 3-5: SPI CONNECTIONS

KSZ8795CLX Signal Name	Microprocessor Signal Description
SPIS_N (S_CS)	SPI Slave Select
SCL (S_CLK)	SPI Clock
SDA (S_DI)	Master Output. Slave Input.
SPIQ (S_DO)	Master Input. Slave Output.

FIGURE 3-7: SPI ACCESS TIMING

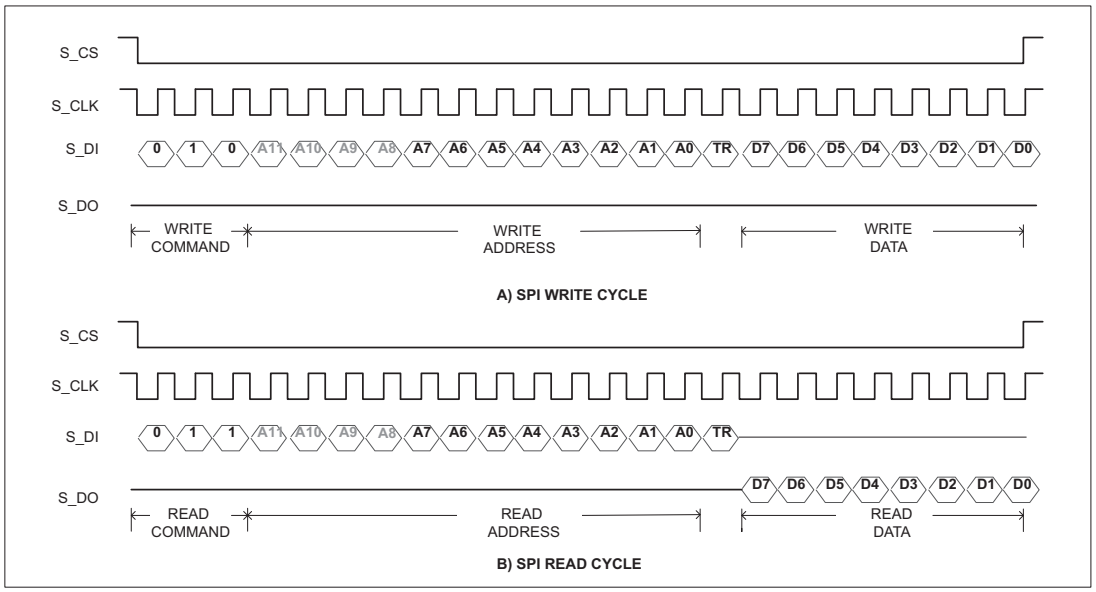

FIGURE 3-8: SPI MULTIPLE ACCESS TIMING

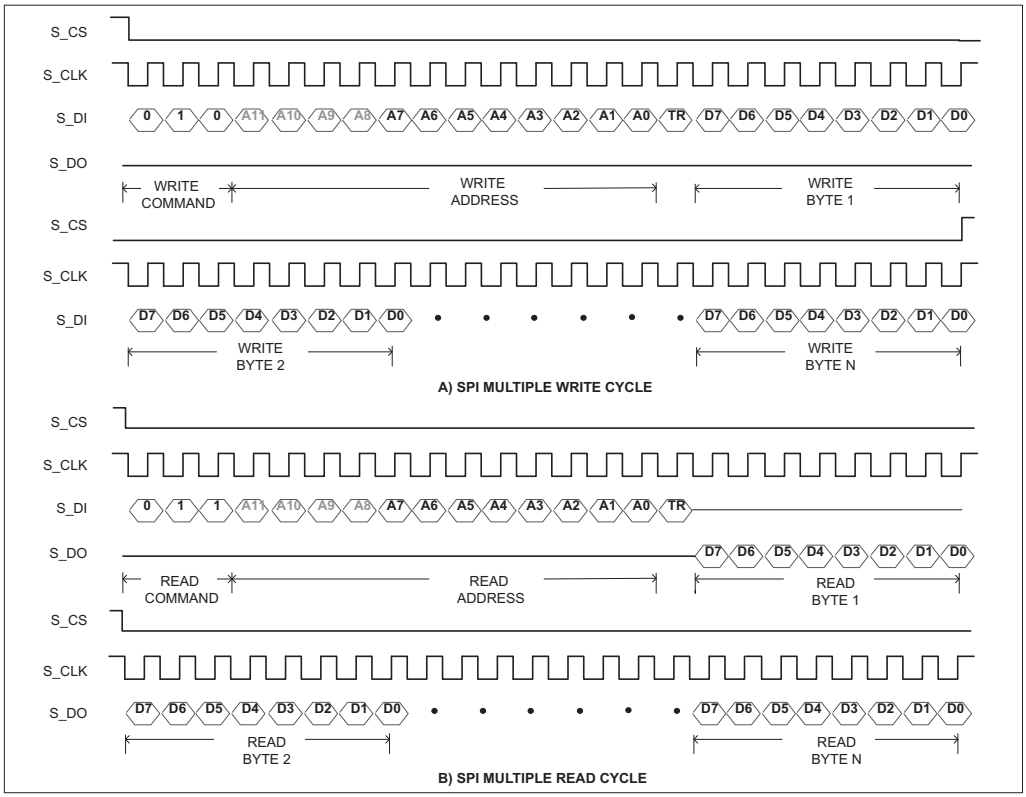

© 2016-2017 Microchip Technology Inc.

3.5.1.2 MII Management Interface (MIIM)

The KSZ8795CLX supports the standard IEEE 802.3 MII management interface, also known as the management data input/output (MDIO) interface. This interface allows upper-layer devices to monitor and control the states of the KSZ8795CLX. An external device with MDC/MDIO capability is used to read the PHY status or configure the PHY settings. Further details on the MIIM interface are found in the IEEE 802.3u Specification.

The MIIM interface consists of the following:

- A physical connection that incorporates the data line MDIO and the clock line MDC.
- A specific protocol that operates across the aforementioned physical connection that allows an external controller to communicate with the KSZ8795CLX device.
- Access to a set of eight 16-bit registers, consisting of 8 standard MIIM Registers [0:5h], 1d and 1f MIIM registers per port.

The MIIM interface MDC/MDIO can operate up to a maximum clock speed of 25 MHz MDC clock.

Table 3-6 depicts the MII management interface frame format.

TABLE 3-6: MII MANAGEMENT INTERFACE FRAME FORMAT (Note 3-1)

	Preamble	Start of Frame	Read/ Write OP Code	PHY Address Bits[4:0]	REG Address Bits[4:0]	TA	Data Bits[15:0]	Idle
Read	32 1s	01	10	AAAAA	RRRRR	Z0	DDDDDDDD_DDDDDDDD	Z
Write	32 1s	01	01	AAAAA	RRRRR	10	DDDDDDDD_DDDDDDDD	Z

Note 3-1 **Preamble** – Consists of 32 1s
Start-of-Frame – The start-of-frame is indicated by a “01” pattern. This pattern assures transitions from the default logic one line state to zero and back to one.
Read/Write OP Code – The operation code for a read transaction is “10”, while the operation code for a write transaction is 01.
PHY Address Bits[4:0] – The PHY address is five bits, allowing 32 unique PHY addresses. The first PHY address bit transmitted and received is the MSB of the address.
REG Address Bits[4:0] – The register address is five bits, allowing 32 individual registers to be addressed within each PHY. The first register address bit transmitted and received is the MSB of the address.
TA (Turnaround) – The turnaround time is 2-bit time spacing between the register address field and the data field of a frame to avoid contention during a read transaction. For a read transaction, both the master and the PHYs shall remain in a high-impedance state for the first bit time of the turnaround. The PHY shall drive a zero bit during the second bit time of the turnaround of a read transaction. During a write transaction, the master shall drive a one bit for the first bit time of the turnaround and a zero bit for the second bit time of the turnaround.
Data Bits[15:0] – The data field is 16 bits. The first data bit transmitted and received shall be Bit[15] of the register being addressed.

At the beginning of each transaction, the master device shall send a sequence of 32 contiguous logic 1 bits on MDIO with 32 corresponding cycles on MDC as clock to provide device with a pattern that it can use to establish synchronization. Device starts respond to any transaction only after observes a sequence of 32 contiguous one bits on MDIO with 32 corresponding cycles on MDC.

The MIIM interface does not have access to all the configuration registers in the KSZ8795CLX. It can only access the standard MIIM register (see the MIIM Registers section). The SPI interface, on the other hand, can be used to access all registers with the entire KSZ8795CLX feature set.

3.5.2 SWITCH PORT 5 GMAC INTERFACE

The KSZ8795CLX GMAC5 interface supports the GMII/MII/RGMII/RMII four interfaces protocols and shares one set of input/output signals. The purpose of this interface is to provide a simple, inexpensive, and easy-to implement interconnection between the GMAC/MAC sub layer and a GPHY/PHY. Data on these interfaces are framed using the IEEE Ethernet standard. As such it consists of a preamble, start of frame delimiter, Ethernet headers, protocol-specific data and a cyclic redundancy check (CRC) checksum.

Transmit and receive signals for GMII/MII/RGMII/RMII interfaces shown in Table 3-7.

TABLE 3-7: SIGNALS OF GMII/RGMII/MII/RMII

Direction Type	GMII	RGMII	MII	RMII
Input (Output)	GTXC	GTXC	TXC	REFCLKI
Input	TXER	—	TXER	—
Input	TXEN	TXD_CTL	TXEN	TXEN
Input (Output)	COL	—	COL	—
Input	TXD[7:0]	TXD[3:0]	TXD[3:0]	TXD[1:0]
Input (Output)	GRXC	GRXC	RXC	RXC
Output	RXER	—	RXER	RXER
Output	RXDV	RXD_CTL	RXDV	CRS_DV
Input (Output)	CRS	—	CRS	—
Output	RXD[7:0]	RXD[3:0]	RXD[3:0]	RXD[1:0]

3.5.2.1 Standard GMII/MII Interface

For MII and GMII, the interface is capable of supporting 10/100 Mbps and 1000 Mbps operation. Data and delimiters are synchronous to clock references. It provides independent four-/eight-bit-wide transmit and receive data paths and uses signal levels, two media status signals are provided. The CRS indicates the presence of carrier, and the COL indicates the occurrence of a collision. Both half- and full-duplex operations are provided by MII and full-duplex operation is used for GMII.

The GMII is based on the MII. MII signal names have been retained and the functions of most signals are the same, but additional valid combinations of signals have been defined for 1000 Mbps operation. The GMII supports only 1000 Mbps operation. Operation at 10 Mbps and 100 Mbps is supported by the MII interface.

The MII transfers data using 4-bit words (nibble) in each direction. It is clocked at 2.5/25 MHz to achieve 10/100 Mbps speed. The GMII transfers data using 8-bit words (nibble) in each direction, clocked at 125 MHz to achieve 1000 Mbps speed.

3.5.2.2 Reduced Gigabit Media Independent Interface (RGMII)

RGMII is intended to be an alternative to the IEEE802.3u MII and the IEEE802.3z GMII. The principle objective is to reduce the number of pins required to interconnect the GMAC and the GPHY in a cost effective and technology independent manner. In order to accomplish this objective, the data paths and all associated control signals will be reduced and control signals will be multiplexed together and both edges of the clock will be used. For Gigabit operation, the clocks will operate at 125 MHz with the rising edge and falling edge to latch the data.

3.5.2.3 Reduced Media Independent Interface (RMII)

The reduced media independent interface (RMII) specifies a low pin count media independent interface (MII). The KSZ8795CLX supports the RMII interface on the Port 5 GMAC5 and provides the following key characteristics:

- Supports 10 Mbps and 100 Mbps data rates.
- Uses a single 50 MHz clock reference (provided internally or externally): in internal mode, the chip provides a reference clock from the RXC5 to the opposite clock input pin for RMII interface. In external mode, the chip receives 50 MHz reference clock from an external oscillator or opposite RMII interface.
- Provides independent 2-bit wide (bi-bit) transmit and receive data paths.

3.5.2.4 Port 5 GMAC5 SW5-MII Interface

Table 3-8 shows two connection methods.

1. The first is an external MAC connecting in SW5-MII PHY mode.
2. The second is an external PHY connecting in SW5-MII MAC mode.

The MAC mode or PHY mode setting is determined by the strap pin 62 LED2_1.

© 2016-2017 Microchip Technology Inc.

TABLE 3-8: PORT 5 SW5-MII CONNECTION

MAC-to-MAC Connection KSZ8795CLX SW5-MII PHY Mode			Description	MAC-to-PHY Connection KSZ8795CLX SW5-MII MAC Mode		
External MAC	KSZ8795CLX SW5-MII Signals	Type		External PHY	KSZ8795CLX SW5-MII Signals	Type
MTXEN	TXEN5	Input	Transmit Enable	MTXEN	RXDV5	Output
MTXER	TXER5	Input	Transmit Error	MTXER	RXER5	Output
MTXD[3:0]	TXD5[3:0]	Input	Transmit Data Bit[3:0]	MTXD[3:0]	RXD5[3:0]	Output
MTXC	TXC5	Output	Transmit Clock	MTXC	RXC5	Input
MCOL	COL5	Output	Collision Detection	MCOL	COL5	Input
MCRS	CRS5	Output	Carrier Sense	MCRS	CRS5	Input
MRXDV	RXDV5	Output	Receive Data Valid	MRXDV	TXEN5	Input
MRXER	RXER5	Output	Receive Error	MRXER	TXER5	Input
MRXD[3:0]	RXD5[3:0]	Output	Receive Data Bit[3:0]	MRXD[3:0]	TXD5[3:0]	Input
MRXC	RXC5	Output	Receive Clock	MRXC	TXC5	Input

The MII interface operates in either MAC mode or PHY mode. These interfaces are nibble-wide data interfaces, so they run at one-quarter the network bit rate (not encoded). Additional signals on the transmit side indicate when data is valid or when an error occurs during transmission. Likewise, the receive side has indicators that convey when the data is valid and without physical layer errors. For half-duplex operation, there is a COL signal that indicates a collision has occurred during transmission.

Note: Normally MRXER would indicate a receive error coming from the physical layer device. MTXER would indicate a transmit error from the MAC device. These signals are not appropriate for this configuration. For PHY mode operation with an external MAC, if the device interfacing with the KSZ8795CLX has an MRXER pin, it can be tied low. For MAC mode operation with an external PHY, if the device interfacing with the KSZ8795-CLX has an MTXER pin, it can be tied low.

3.5.2.5 Port 5 GMAC5 SW5-GMII Interface

Table 3-9 shows two GMII connection methods when connected to an external GMAC or GPHY.

- The first is an external GMAC connecting in SW5-GMII GPHY mode.
- The second is an external GPHY connecting in SW5-GMII GMAC mode.

The GMAC mode or GPHY mode setting is determined by the strap Pin 62 LED2_1.

TABLE 3-9: PORT 5 SW5-GMII CONNECTION

GMAC-to-GMAC Connection KSZ8795CLX SW5-GMII GPHY Mode			Description	GMAC-to-GPHY Connection KSZ8795CLX SW5-GMII GMAC Mode		
External GMAC	KSZ8795CLX SW5-GMII Signals	Type		External GPHY	KSZ8795CLX SW5-GMII Signals	Type
MTXEN	TXEN5	Input	Transmit Enable	MTXEN	RXDV5	Output
MTXER	TXER5	Input	Transmit Error	MTXER	RXER5	Output
MTXD[7:0]	TXD5[7:0]	Input	Transmit Data Bits[7:0]	MTXD[7:0]	RXD5[7:0]	Output
MGTXC	GTXC5	Input	Transmit Clock	MGTXC	GRXC5	Output

TABLE 3-9: PORT 5 SW5-GMII CONNECTION (CONTINUED)

GMAC-to-GMAC Connection KSZ8795CLX SW5-GMII GPHY Mode			Description	GMAC-to-GPHY Connection KSZ8795CLX SW5-GMII GMAC Mode		
External GMAC	KSZ8795CLX SW5-GMII Signals	Type		External GPHY	KSZ8795CLX SW5-GMII Signals	Type
MCOL	COL5	Output	Collision Detection	MCOL	COL5	Input
MCRS	CRS5	Output	Carrier Sense	MCRS	CRS5	Input
MRXDV	RXDV5	Output	Receive Data Valid	MRXDV	TXEN5	Input
MRXER	RXER5	Output	Receive Error	MRXER	TXER5	Input
MRXD[7:0]	RXD5[7:0]	Output	Receive Data Bits[7:0]	MRXD[7:0]	TXD5[7:0]	Input
MGRXC	GRXC5	Output	Receive Clock	MGRXC	GTXC5	Input

The Port 5 GMAC5 SW5-GMII interface operates at up to 1000 Mbps. In 1Gbps mode, GMII supports the full-duplex only. The GMII interface is 8-bits data in each direction. Additional signals on the transmit side indicate when data is valid or when an error occurs during transmission. Likewise, the receive side has indicators that convey when the data is valid and without physical layer errors. For half-duplex operation in 10/100 Mbps mode, there is a COL signal that indicates a collision has occurred during transmission.

3.5.2.6 Port 5 GMAC5 SW5-RGMII Interface

Table 3-10 shows the RGMII reduced connections when connecting to an external GMAC or GPHY.

TABLE 3-10: PORT 5 SW5-RGMII CONNECTION

KSZ8795CLX SW5-RGMII Connection			Description
External GMAC/GPHY	KSZ8795CLX SW5-RGMII Signals	Type	
MRX_CTL	TXD5_CTL	Input	Transmit Control
MRXD[3:0]	TXD5[3:0]	Input	Transmit Data Bit[3:0]
MRX_CLK	GTX5_CLK	Input	Transmit Clock
MTX_CLK	RXD5_CTL	Output	Receive Control
MTXD[3:0]	RXD5[3:0]	Output	Receive Data Bit[3:0]
MGTX_CLK	GRXC5	Output	Receive Clock

The RGMII interface operates at up to a 1000 Mbps speed rate. Additional transmit and receive signals control the different direction of the data transfer. This RGMII interface supports RGMII Rev 2.0 with adjustable ingress clock and egress clock delay by the Register 86 (0x56).

For RGMII to correctly configure with the connection partner, Register 86 (0x56) bits [4:3] need to be set up correctly. A configuration table is found in Table 3-11.

TABLE 3-11: PORT 5 SW5-RGMII CLOCK DELAY CONFIGURATION WITH CONNECTION PARTNER

KSZ8795CLX Register 86 Bits[4:3] Configuration	RGMII Clock Mode (Receive and Transmit)	KSZ8795CLX Register 86 (0x56)	KSZ8795CLX RGMII Clock Delay/Slew Configuration	Connection Partner RGMII Clock Configuration (Note 3-1)
Bit[4:3] = 11 Mode	Ingress Clock Input	Bit[4] = 1	Delay	No Delay
	Egress Clock Output	Bit[3] = 1	Delay	No Delay
Bit[4:3] = 10 Mode	Ingress Clock Input	Bit[4] = 1	Delay	No Delay
	Egress Clock Output	Bit[3] = 1	No Delay	Delay

© 2016-2017 Microchip Technology Inc.

TABLE 3-11: PORT 5 SW5-RGMII CLOCK DELAY CONFIGURATION WITH CONNECTION PARTNER (CONTINUED)

KSZ8795CLX Register 86 Bits[4:3] Configuration	RGMII Clock Mode (Receive and Transmit)	KSZ8795CLX Register 86 (0x56)	KSZ8795CLX RGMII Clock Delay/Slew Configuration	Connection Partner RGMII Clock Configuration (Note 3-1)
Bit[4:3] = 01 Mode	Ingress Clock Input	Bit[4] = 0 (default)	No Delay	Delay
	Egress Clock Output	Bit[3] = 0 (default)	Delay	No Delay
Bit[4:3] = 00 Mode	Ingress Clock Input	Bit[4] = 0	No Delay	Delay
	Egress Clock Output	Bit[3] = 0	No Delay	Delay

Note 3-1 Processor with RGMII, an external GPHY or KSZ8795CLX back-to-back connection.

For example, two KSZ8795 devices are the back-to-back connection. If one device set bit[4:3] ='11', another one should set Bit[4:3] = '00'. If one device set Bit[4:3] ='01', another one should set Bit[4:3] = '01' too.

The RGMII mode is configured by the strap-in pin LED3 [1:0] ='11' (default) or Register 86 (0x56) bits[1:0] = '11' (default). The speed choice is by the strap-in pin LED1_0 or Register 86 (0x56) Bit[6], the default speed is 1Gbps with bit[6] = 1', set bit[6] = '0' is for 10/100 Mbps speed in RGMII mode. KSZ8795CLX provides Register 86 bits[4:3] with the adjustable clock delay and Register 164 bits[6:4] with the adjustable drive strength for best RGMII timing on board level in 1Gbps mode.

3.5.2.7 Port 5 GMAC5 SW5-RMII Interface

The RMII specifies a low pin count MII. The KSZ8795CLX supports RMII interface on Port 5 and provides the following key characteristics:

- Supports 10 Mbps and 100 Mbps data rates.
- Uses a single 50 MHz clock reference (provided internally or externally): In internal mode, the chip provides a reference clock from the RXC5 pin to the opposite clock input pin for RMII interface when Port 5 RMII is set to clock mode.
- In external mode, the chip receives 50 MHz reference clock on the TXC5/REFCLKI5 pin from an external oscillator or opposite RMII interface when the device is set to normal mode.
- Provides independent 2-bit wide (bi-bit) transmit and receive data paths.

For the details of SW5-RMII (Port 5 GMAC5 RMII) signal connection, see Table 3-12.

When the device is strapped to normal mode, the reference clock comes from the TXC5/REFCLKI5 pin and will be used as the device's clock source. Set the strap pin LED1_1 can select the device's clock source either from the TXC5/REFCLKI5 pin or from an external 25 MHz crystal/oscillator clock on the XI/XO pin.

In internal mode, when using an internal 50 MHz clock as SW5-RMII reference clock, the KSZ8795CLX port 5 should be set to clock mode by the strap pin LED2_1 or the port Register 86 bit[7]. The clock mode of the KSZ8795CLX device will provide the 50 MHz reference clock to the port 5 RMII interface.

In external mode, when using an external 50 MHz clock source as SW5-RMII reference clock, the KSZ8795CLX port 5 should be set to normal mode by the strap pin LED2_1 or the port Register 86 bit[7]. The normal mode of the KSZ8795-CLX device will start to work when it receives the 50 MHz reference clock on the TXC5/REFCLKI5 pin from an external 50 MHz clock source.

TABLE 3-12: PORT 5 SW5-RMII CONNECTION

SW5-RMII MAC-to-MAC Connection (PHY Mode)			Description	SW5-RMII MAC-to-PHY Connection (MAC Mode)		
External MAC	**KSZ8795CLX SW5-RMII Signals**	**Type**		**External PHY**	**KSZ8795CLX SW5-RMII Signals**	**Type**
REF_CLKI	RXC5	Output 50 MHz in Clock Mode	Reference Clock	50 MHz	REFCLKI5	Input 50 MHz in Normal Mode
CRS_DV	RXDV5/ CRSDV5	Output	Carrier Sense/ Receive Data Valid	CRS_DV	TXEN5	Input
—	—	—	Receive Error	RXER	TXER5	Input
RXD[1:0]	RXD5[1:0]	Output	Receive Data Bit[1:0]	RXD[1:0]	TXD5[1:0]	Input
TX_EN	TXEN5	Input	Transmit Data Enable	TX_EN	RXDV5/ CRSDV5	Output
TXD[1:0]	TXD5[1:0]	Input	Transmit Data Bit[1:0]	TXD[1:0]	RXD[1:0]	Output
50 MHz	REFCLKI5	Input 50 MHz in Normal Mode	Reference Clock	REF_CLKI	RXC5	Output 50 MHz in Clock Mode

3.6 Advanced Functionality

3.6.1 QOS PRIORITY SUPPORT

The KSZ8795CLX provides quality-of-service (QoS) for applications such as VoIP and video conferencing. The KSZ8795CLX offers one, two, or four priority queues per port by setting the Port Control 13 Registers Bit[1] and the Port Control 0 Registers Bit[0], the 1/2/4 queues split as follows:

- [Port Control 9 Registers Bit[1], Control 0 Bit[0]] = 00 Single output queue as default.
- [Port Control 9 Registers Bit[1], Control 0 Bit[0]] = 01 Egress port can be split into two priority transmit queues.
- [Port Control 9 Registers Bit[1], Control 0 Bit[0]] = 10 Egress port can be split into four priority transmit queues.

The four priority transmit queue is a new feature in the KSZ8795CLX. Queue 3 is the highest priority queue and queue 0 is the lowest priority queue. The Port Control 9 Registers Bit[1] and the Port Control 0 Registers Bit[0] are used to enable split transmit queues for Ports 1, 2, 3, 4 and 5, respectively. If a Port's transmit queue is not split, high priority and low priority packets have equal priority in the transmit queue.

There is an additional option to either always deliver high priority packets first or to use programmable weighted fair queuing for the four priority queue scale by the Port Control 14, 15, 16 and 17 Registers (default values are 8, 4, 2, 1 by their bits [6:0]).

Register 130 Bit[7:6] Prio_2Q[1:0] is used when the 2-Queue configuration is selected. These bits are used to map the 2-bit result of IEEE 802.1p from the Registers 128, 129 or TOS/DiffServ mapping from Registers 144-159 (for 4 Queues) into 2-Queue mode with priority high or low.

Please see the descriptions of Register 130 bits [7:6] for detail.

3.6.1.1 Port-Based Priority

With port-based priority, each ingress port is individually classified as a priority 0-3 receiving port. All packets received at the priority 3 receiving port are marked as high-priority and are sent to the high-priority transmit queue if the corresponding transmit queue is split. The Port Control 0 Registers bits [4:3] is used to enable port-based priority for ports 1, 2, 3, 4 and 5, respectively.

© 2016-2017 Microchip Technology Inc.

3.6.1.2 802.1p-Based Priority

For 802.1p-based priority, the KSZ8795CLX examines the ingress (incoming) packets to determine whether they are tagged. If tagged, the 3-bit priority field in the VLAN tag is retrieved and compared against the “priority mapping” value, as specified by the Registers 128 and 129, both Register 128 and 129 can map 3-bit priority field of 0-7 value to 2-bit result of 0-3 priority levels. The “priority mapping” value is programmable.

Figure 3-9 illustrates how the 802.1p priority field is embedded in the 802.1Q VLAN tag.

FIGURE 3-9: 802.1P PRIORITY FIELD FORMAT

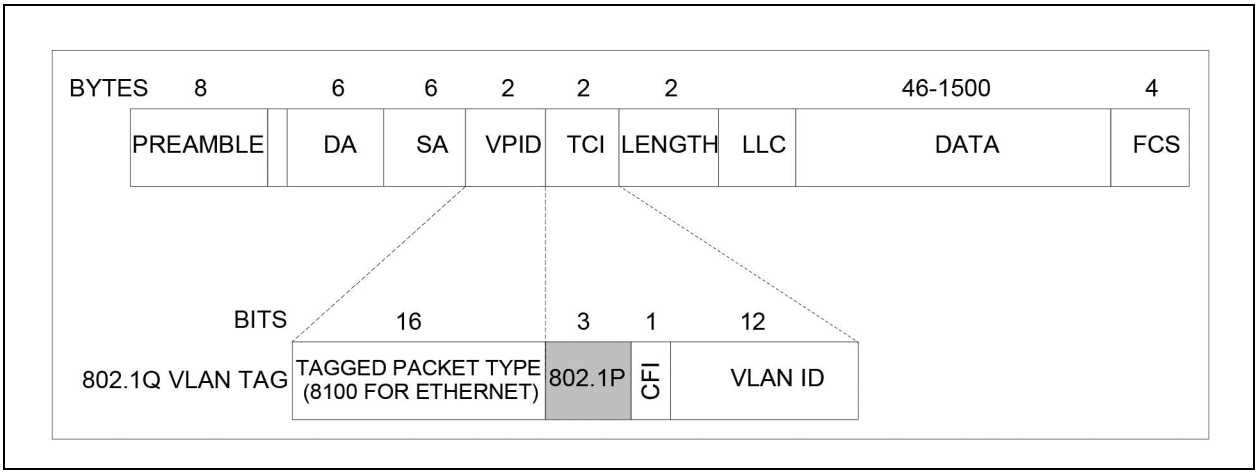

The 802.1p-based priority is enabled by Bit[5] of the Port Control 0 Registers for ports 1, 2, 3, 4 and 5, respectively.

The KSZ8795CLX provides the option to insert or remove the priority tagged frame's header at each individual egress port. This header, consisting of the two-byte VLAN Protocol ID (VPID) and the two-byte tag control information field (TCI), is also referred to as the IEEE 802.1Q VLAN tag.

Tag insertion is enabled by bit[2] of the Port Control 0 Registers and the Port Control 8 Registers to select which source port (ingress port) PVID can be inserted on the egress port for ports 1, 2, 3, 4 and 5, respectively. At the egress port, untagged packets are tagged with the ingress port’s default tag. The default tags are programmed in the port control 3 and control 4 Registers for ports 1, 2, 3, 4 and 5, respectively. The KSZ8795CLX will not add tags to already tagged packets.

Tag removal is enabled by Bit[1] of the Port Control 0 Registers for Ports 1, 2, 3, 4 and 5, respectively. At the egress port, tagged packets will have their 802.1Q VLAN tags removed. The KSZ8795CLX will not modify untagged packets.

The CRC is recalculated for both tag insertion and tag removal.

802.1p priority field re-mapping is a QoS feature that allows the KSZ8795CLX to set the “User Priority Ceiling” at any ingress port by the Port Control 2 Register Bit[7]. If the ingress packet’s priority field has a higher priority value than the default tag’s priority field of the ingress port, the packet’s priority field is replaced with the default tag’s priority field.

3.6.1.3 DiffServ-Based Priority

DiffServ-based priority uses the ToS registers (Registers 144 to 159) in the “Advanced Control Registers” sub-section. The ToS priority control registers implement a fully decoded, 128-bit differentiated services code point (DSCP) register to determine packet priority from the 6-bit ToS field in the IP header. When the most significant six bits of the ToS field are fully decoded, 64 code points for DSCP result. These are compared with the corresponding bits in the DSCP register to determine priority.

3.6.2 SPANNING TREE SUPPORT

Port 5 is the designated port for spanning tree support.

The other ports (Port 1 - Port 4) can be configured in one of the five spanning tree states via the “transmit enable,” “receive enable,” and “learning disable” register settings in Registers 18, 34, 50, and 66 for Ports 1, 2, 3, and 4, respectively. The following description shows the port setting and software actions taken for each of the five spanning tree states.

The KSZ8795CLX supports common spanning tree (CST). To support spanning tree, the host port (Port 5) is the designated port for the processor. The other ports can be configured in one of the five spanning tree states via “transmit enable”, “receive enable” and “learning disable” register settings in: Port Control 2 Registers. Table 3-13 shows the port setting and software actions taken for each of the five spanning tree states.

TABLE 3-13: PORT SETTING AND SOFTWARE ACTIONS FOR SPANNING TREE

Disable State	Port Setting	Software Action
The port should not forward or receive any packets. Learning is disabled.	"Transmit enable = 0, Receive enable = 0, Learning disable = 1."	The processor should not send any packets to the port. The switch may still send specific packets to the processor (packets that match some entries in the static table with “overriding bit” set) and the processor should discard those packets. **Note:** Processor is connected to Port 5 via MII interface. Address learning is disabled on the port in this state.
Blocking State	**Port Setting**	**Software Action**
Only packets to the processor are forwarded. Learning is disabled.	"Transmit enable = 0, Receive enable = 0, Learning disable = 1"	The processor should not send any packets to the port(s) in this state. The processor should program the static MAC table with the entries that it needs to receive (e.g., BPDU packets). The “overriding” bit should also be set so that the switch will forward those specific packets to the processor. Address learning is disabled on the port in this state.
Listening State	**Port Setting**	**Software Action**
Only packets to and from the processor are forwarded. Learning is disabled.	"Transmit enable = 0, Receive enable = 0, Learning disable = 1.	The processor should program the static MAC table with the entries that it needs to receive (e.g. BPDU packets). The “overriding” bit should be set so that the switch will forward those specific packets to the processor. The processor may send packets to the port(s) in this state (see “Tail Tagging Mode” section for details). Address learning is disabled on the port in this state.
Learning State	**Port Setting**	**Software Action**
Only packets to and from the processor are forwarded. Learning is enabled.	“Transmit enable = 0, Receive enable = 0, Learning disable = 0.”	The processor should program the static MAC table with the entries that it needs to receive (e.g., BPDU packets). The “overriding” bit should be set so that the switch will forward those specific packets to the processor. The processor may send packets to the port(s) in this state (see “Tail Tagging Mode” section for details). Address learning is enabled on the port in this state.
Forwarding State	**Port Setting**	**Software Action**
Packets are forwarded and received normally. Learning is enabled.	“Transmit enable = 1, Receive enable = 1, Learning disable = 0.”	The processor should program the static MAC table with the entries that it needs to receive (e.g., BPDU packets). The “overriding” bit should be set so that the switch will forward those specific packets to the processor. The processor may send packets to the port(s) in this state (see “Tail Tagging Mode” section for details). Address learning is enabled on the port in this state.

© 2016-2017 Microchip Technology Inc.

3.6.3 RAPID SPANNING TREE SUPPORT

There are three operational states of the discarding, learning, and forwarding assigned to each port for RSTP. Discarding ports do not participate in the active topology and do not learn MAC addresses. Ports in the learning states learn MAC addresses, but do not forward user traffic. Ports in the forwarding states fully participate in both data forwarding and MAC learning. RSTP uses only one type of BPDU called RSTP BPDUs. They are similar to STP configuration BPDUs with the exception of a type field set to “version 2” for RSTP and “version 0” for STP, and flag field carrying additional information.

TABLE 3-14: PORT SETTING AND SOFTWARE ACTIONS FOR RAPID SPANNING TREE

Disable State	Port Setting	Software Action
The state includes three states of the disable, blocking and listening of STP.	"Transmit enable = 0, Receive enable = 0, Learning disable = 1."	The processor should not send any packets to the port. The switch may still send specific packets to the processor (packets that match some entries in the static table with “overriding bit” set) and the processor should discard those packets. When disable the port’s learning capability (learning disable = ’1’), set the Register 1 Bit[5] and Bit[4] will flush rapidly with the port-related entries in the dynamic MAC table and static MAC table. **Note:** Processor is connected to Port 5 via MII interface. Address learning is disabled on the port in this state.
Learning State	**Port Setting**	**Software Action**
Only packets to and from the processor are forwarded. Learning is enabled.	“Transmit enable = 0, Receive enable = 0, Learning disable = 0.”	The processor should program the static MAC table with the entries that it needs to receive (e.g., BPDU packets). The “overriding” bit should be set so that the switch will forward those specific packets to the processor. The processor may send packets to the port(s) in this state (see “Tail Tagging Mode” section for details). Address learning is enabled on the Port in this state.
Forwarding State	**Port Setting**	**Software Action**
Packets are forwarded and received normally. Learning is enabled.	“Transmit enable = 1, Receive enable = 1, Learning disable = 0.”	The processor should program the static MAC table with the entries that it needs to receive (e.g., BPDU packets). The “overriding” bit should be set so that the switch will forward those specific packets to the processor. The processor may send packets to the port(s) in this state (see “Tail Tagging Mode” section for details). Address learning is enabled on the port in this state.

3.6.4 TAIL TAGGING MODE

The tail tag is only seen and used by the Port 5 interface, which should be connected to a processor by the SW5-GMII, RGMII, MII, or RMII interfaces. One byte tail tagging is used to indicate the source/destination port on Port 5. Only bits [3:0] are used for the destination in the tail tagging byte. Other bits are not used. The tail tag feature is enabled by setting Register 12 Bit[1].

FIGURE 3-10: TAIL TAG FRAME FORMAT

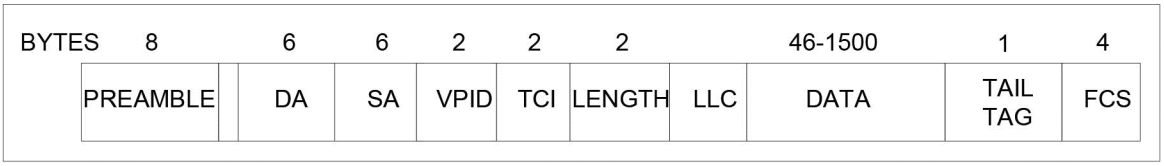

TABLE 3-15: TAIL TAG RULES

Ingress to Port 5 (Host to KSZ8795CLX)	
Bits[3:0]	**Destination**
0,0,0,0	Reserved
0,0,0,1	Port 1 (Direct forward to Port 1)
0,0,1,0	Port 2 (Direct forward to Port 2)
0,1,0,0	Port 3 (Direct forward to Port 3)
1,0,0,0	Port 4 (Direct forward to Port 4)
1,1,1,1	Port 1, 2, 3, and 4 (direct forward to Port 1, 2, 3, 4)
Bits[7:4]	—
0,0,0,0	Queue 0 is used at destination port
0,0,0,1	Queue 1 is used at destination port
0,0,1,0	Queue 2 is used at destination port
0,0,1,1	Queue 3 is used at destination port
0,1,x,x	Anyhow send packets to specified port in Bits[3:0]
1,x,x,x	Bits[6:0] will be ignored as normal (address look-up)
Egress from Port 5 (KSZ8795CLX to Host)	
Bits[1:0]	**Source**
0,0	Port 1 (Packets from Port 1)
0,1	Port 2 (Packets from Port 2)
1,0	Port 3 (Packets from Port 3)
1,1	Port 4 (Packets from Port 4)

3.6.5 IGMP SUPPORT

There are two components involved with the support of the Internet group management protocol (IGMP) in Layer 2. The first part is IGMP snooping, the second part is this IGMP packet which is sent back to the subscribed port. Those components are as follows.

3.6.5.1 IGMP Snooping

The KSZ8795CLX traps IGMP packets and forwards them only to the processor (Port 5 SW5-RGMII/MII/RMII). The IGMP packets are identified as IP packets (either Ethernet IP packets, or IEEE 802.3 SNAP IP packets) with IP version = 0x4 and protocol version number = 0x2. Set Register 5 Bit[6] to ‘1’ to enable IGMP snooping.

3.6.5.2 IGMP Send Back to the Subscribed Port

Once the host responds to the received IGMP packet, the host should know the original IGMP ingress port and send back the IGMP packet to this port only, to avoid this IGMP packet being broadcast to all ports which will downgrade the performance.

With the tail tag mode enabled, the host will know the port which IGMP packet has been received from tail tag bits [1:0] and can send back the response IGMP packet to this subscribed port by setting bits [3:0] in the tail tag. Enable tail tag mode by setting Register 12 Bit[1].

3.6.6 IPV6 MLD SNOOPING

The KSZ8795CLX traps IPv6 multicast listener discovery (MLD) packets and forwards them only to the processor (Port 5). MLD snooping is controlled by Register 164 Bit[2] (MLD snooping enable) and Register 164 Bit[3] (MLD option).

With MLD snooping enabled, the KSZ8795CLX traps packets that meet all of the following conditions:

- IPv6 multicast packets
- Hop count limit = 1
- IPv6 next header = 1 or 58 (or = 0 with hop-by-hop next header = 1 or 58) If the MLD option bit is set to “1”, the KSZ8795CLX traps packets with the following additional condition:
  - IPv6 next header = 43, 44, 50, 51, or 60 (or = 0 with hop-by-hop next header = 43, 44, 50, 51, or 60)

© 2016-2017 Microchip Technology Inc.

For MLD snooping, tail tag mode also needs to be enabled, so that the processor knows which port the MLD packet was received on. This is achieved by setting Register 12 Bit[1].

3.6.7 PORT MIRRORING SUPPORT

The KSZ8795CLX supports “port mirror” as described in the following:

3.6.7.1 “Receive Only” Mirror on a Port

All the packets received on the port will be mirrored on the sniffer port. For example, Port 1 is programmed to be “RX sniff,” and Port 5 is programmed to be the “sniffer port”. A packet, received on Port 1, is destined to Port 4 after the internal look-up. The KSZ8795CLX will forward the packet to both Port 4 and Port 5. KSZ8795CLX can optionally forward even “bad” received packets to Port 5.

3.6.7.2 “Transmit Only” Mirror on a Port

All the packets transmitted on the port will be mirrored on the Sniffer Port. For example, Port 1 is programmed to be “TX sniff,” and Port 5 is programmed to be the “sniffer port”. A packet, received on any of the Ports, is destined to Port 1 after the internal look-up. The KSZ8795CLX will forward the packet to both Ports 1 and 5.

3.6.7.3 “Receive and Transmit” Mirror on Two Ports

All the packets received on Port A and transmitted on Port B will be mirrored on the sniffer port. To turn on the “AND” feature, set Register 5 bit[0] to Bit[1]. For example, Port 1 is programmed to be “RX sniff,” Port 2 is programmed to be “TX sniff,” and Port 5 is programmed to be the “sniffer port”. A packet, received on Port 1, is destined to Port 4 after the internal look-up. The KSZ8795CLX will forward the packet to Port 4 only because it does not meet the “AND” condition. A packet, received on Port 1, is destined to Port 2 after the internal look-up. The KSZ8795CLX will forward the packet to both Port 2 and Port 5.

Multiple ports can be selected to be “RX sniffed” or “TX sniffed.” Any port can be selected to be the “sniffer port.” All these per port features can be selected through the Port Control 1 Register.

3.6.8 VLAN SUPPORT

The KSZ8795CLX supports 128 active VLANs and 4096 possible VIDs specified in IEEE 802.1q. The KSZ8795CLX provides a 128-entry VLAN table, which correspond to 4096 possible VIDs and converts to FID (7 bits) for address look-up max 128 active VLANs. If a non-tagged or null-VID-tagged packet is received, then the ingress port VID is used for look-up when 802.1q is enabled by the global Register 5 control 3 Bit[7]. In the VLAN mode, the look-up process starts from VLAN table look-up to determine whether the VID is valid. If the VID is not valid, the packet will then be dropped and its address will not be learned. If the VID is valid, FID is retrieved for further look-up by the static MAC table or dynamic MAC table. FID+DA is used to determine the destination port.

Table 3-16 describes the different actions in different situations of DA and FID+DA in the static MAC table and dynamic MAC table after the VLAN table finishes a look-up action. FID+SA is used for learning purposes. Table 3-17 also describes learning in the dynamic MAC table when the VLAN table has done a look-up in the static MAC table without a valid entry.

TABLE 3-16: FID+DA LOOK-UP IN VLAN MODE

DA Found in Static MAC Table?	Use FID Flag?	FID Match?	FID+DA Found in Dynamic MAC Table?	Action
No	Don’t Care	Don’t Care	No	Broadcast to the membership ports defined in the VLAN Table Bits[11:7].
No	Don’t Care	Don’t Care	Yes	Send to the destination port defined in the Dynamic MAC Address Table Bits[58:56].
Yes	0	Don’t Care	Don’t Care	Send to the destination port(s) defined in the Static MAC Address Table Bits[52:48].
Yes	1	No	No	Broadcast to the membership ports defined in the VLAN Table Bits[11:7].

TABLE 3-16: FID+DA LOOK-UP IN VLAN MODE (CONTINUED)

DA Found in Static MAC Table?	Use FID Flag?	FID Match?	FID+DA Found in Dynamic MAC Table?	Action
Yes	1	No	Yes	Send to the destination port defined in the Dynamic MAC Address Table Bits[58:56].
Yes	1	Yes	Don't Care	Send to the destination port(s) defined in the Static MAC Address Table bits[52:48].

TABLE 3-17: FID+SA LOOK-UP IN VLAN MODE

FID+SA Found in Dynamic MAC Table?	Action
No	The FID+SA will be learned into the dynamic table.
Yes	Time stamp will be updated.

Advanced VLAN features are also supported in KSZ8795CLX, such as "VLAN ingress filtering" and "discard non PVID" defined in bits [6:5] of the Port Control 2 Register. These features can be controlled on a per port basis.

3.6.9 RATE LIMITING SUPPORT

The KSZ8795CLX provides a fine resolution hardware rate limiting based on both bps (bit per second) and pps (packet per second).

For bps, the rate step is 64 Kbps when the rate limit is less than 1Mbps rate for 100BT or 10BT, and 640 Kbps for 1000. The rate step is 1Mbps when the rate limit is more than 1Mbps rate for 100BT or 10BT, 10 Mbps for 1000.

For pps, the rate step is 128 pps (besides the 1st one which is 64 pps) when the rate limit is less than 1Mbps rate for 100BT or 10BT, and 1280 pps (except the 1st one of 640 pps) for 1000. The rate step is 1Mbps when the rate limit is more than 1.92 Kpps rate for 100BT or 10BT, 19.2 Kpps for 1000 (refer to Table 3-18).

The pps limiting is bounded by the bps rate for each pps setting. The mapping is shown in the 2nd column of Table 3-18.

TABLE 3-18: 10/100/1000 MBPS RATE SELECTION FOR THE RATE LIMIT

Item	Bps Bound of pps (Egress Only)	10 Mbps		100 Mbps		1000 Mbps	
7d'0	7d'0	19.2 Kpps	10 Mbps	19.2 Kpps	100 Mbps	1.92 Mpps	1000 Mbps
7d'1 - 7d'10	7d'3, 6, (8x)10	1.92 Kpps x code	1Mbps x code	1.92 Kpps x code	1Mbps x code	19.2 Kpps x code	10 Mbps x code
7d'11 - 7d'100	7d'11 - 7d'100	—	10 Mbps	1.92 Kpps x code	1Mbps x code	19.2 Kpps x code	10 Mbps x code
7d'101	7d'102	64 pps	64 Kbps	64 pps	64 Kbps	640 pps	640 Kbps
7d'102	7d'104	128 pps	128 Kbps	128 pps	128 Kbps	1280 pps	1280 Kbps
7d'103	7d'108	256 pps	192 Kbps	256 pps	192 Kbps	2560 pps	1920 Kbps
7d'104	7d'112	384 pps	256 Kbps	384 pps	256 Kbps	3840 pps	2560 Kbps
7d'105	7d'001	512 pps	320 Kbps	512 pps	320 Kbps	5120 pps	3200 Kbps
7d'106	7d'001	640 pps	384 Kbps	640 pps	384 Kbps	6400 pps	3840 Kbps
7d'107	7d'001	768 pps	448 Kbps	768 pps	448 Kbps	7680 pps	4480 Kbps
7d'108	7d'002	896 pps	512 Kbps	896 pps	512 Kbps	8960 pps	5120 Kbps
7d'109	7d'002	1024 pps	576 Kbps	1024 pps	576 Kbps	10240 pps	5760 Kbps
7d'110	7d'002	1152 pps	640 Kbps	1152 pps	640 Kbps	11520 pps	6400 Kbps
7d'111	7d'002	1280 pps	704 Kbps	1280 pps	704 Kbps	12800 pps	7040 Kbps
7d'112	7d'002	1408 pps	768 Kbps	1408 pps	768 Kbps	14080 pps	7680 Kbps
7d'113	7d'003	1536 pps	832 Kbps	1536 pps	832 Kbps	15360 pps	8320 Kbps

© 2016-2017 Microchip Technology Inc.

TABLE 3-18: 10/100/1000 MBPS RATE SELECTION FOR THE RATE LIMIT (CONTINUED)

Item	Bps Bound of pps (Egress Only)	10 Mbps		100 Mbps		1000 Mbps	
7d'114	7d'003	1664 pps	896 Kbps	1664 pps	896 Kbps	16640 pps	8960 Kbps
7d'115	7d'003	1792 pps	969 Kbps	1792 pps	969 Kbps	17920 pps	9690 Kbps

The rate limit is independently on the "receive side" and on the "transmit side" on a per port basis. For 10BASE-T, a rate setting above 10 Mbps means the rate is not limited.

On the receive side, the data receive rate for each priority at each port can be limited by setting up ingress rate control registers. On the transmit side, the data transmit rate for each queue at each port can be limited by setting up egress rate control registers. For bps mode, the size of each frame has options to include minimum interframe gap (IFG) or preamble byte, in addition to the data field (from packet DA to FCS).

3.6.9.1 Ingress Rate Limit

For ingress rate limiting, KSZ8795CLX provides options to selectively choose frames from all types; multicast, broadcast, and flooded unicast frames via bits [3:2] of the port rate limit control register. The KSZ8795CLX counts the data rate from those selected type of frames. Packets are dropped at the ingress port when the data rate exceeds the specified rate limit or the flow control takes effect without packet dropped when the ingress rate limit flow control is enabled by the Port Rate Limit Control Register Bit[4]. The ingress rate limiting supports the port-based, 802.1p and DiffServ-based priorities. The port-based priority is fixed priority 0-3 selection by bits [4:3] of the Port Control 0 register. The 802.1p and DiffServ-based priority can be mapped to priority 0-3 by default of the Register 128 and 129. In the ingress rate limit, set Register 135 Global Control 19 Bit[3] to enable queue-based rate limit if using 2-queue or 4-queue mode. All related ingress ports and egress port should be split to two-queue or four-queue mode by the Port Control 9 and Control 0 registers. The 4-queue mode will use Q0-Q3 for priority 0-3 by bits [6:0] of the Port Register Ingress Limit Control 1-4. The 2-queue mode will use Q0-Q1 for priority 0-1 by bits [6:0] of the port ingress limit control 1-2 registers. The priority levels in the packets of the 802.1p and DiffServ can be programmed to priority 0-3 via the Register 128 and 129 for a re-mapping.

3.6.9.2 Egress Rate Limit

For egress rate limiting, the leaky bucket algorithm is applied to each output priority queue for shaping output traffic. Interframe gap is stretched on a per frame base to generate smooth, non-burst egress traffic. The throughput of each output priority queue is limited by the egress rate specified by the data rate selection table followed the egress rate limit control registers.

If any egress queue receives more traffic than the specified egress rate throughput, packets may be accumulated in the output queue and packet memory. After the memory of the queue or the port is used up, packet dropping or flow control will be triggered. As a result of congestion, the actual egress rate may be dominated by flow control/dropping at the ingress end, and may be therefore slightly less than the specified egress rate. The egress rate limiting supports the port-based, 802.1p and DiffServ-based priorities, the port-based priority is fixed priority 0-3 selection by bits [4:3] of the Port Control 0 register. The 802.1p and DiffServ-based priority can be mapped to priority 0-3 by default of the Register 128 and 129. In the egress rate limit, set Register 135 Global Control 19 Bit[3] for queue-based rate limit to be enabled if using two-queue or four-queue mode. All related ingress ports and egress port should be split to 2-queue or 4-queue mode by the Port Control 9 and Control 0 Registers. The 4-queue mode will use Q0-Q3 for priority 0-3 by bits [6:0] of the Port Egress Limit Control 1-4 register. The 2-queue mode will use Q0-Q1 for priority 0-1 by bits [6:0] of the Port Egress Rate Limit Control 1-2 register. The priority levels in the packets of the 802.1p and DiffServ can be programmed to priority 0-3 by Register 128 and 129 for a re-mapping.

When the egress rate is limited, just use one queue per port for the egress port rate limit. The priority packets will be based upon the data rate selection table (see Table 3-18). If the egress rate limit uses more than one queue per port for the egress port rate limit, then the highest priority packets will be based upon the data rate selection table for the rate limit exact number. Other lower priority packet rates will be limited based upon 8:4:2:1 (default) priority ratio, which is based on the highest priority rate. The transmit queue priority ratio is programmable.

To reduce congestion, it is good practice to make sure the egress bandwidth exceeds the ingress bandwidth.

3.6.9.3 Transmit Queue Ratio Programming

In transmit queues 0-3 of the egress port, the default priority ratio is 8:4:2:1. The priority ratio can be programmed by the Port Control 10, 11, 12, and 13 registers. When the transmit rate exceeds the ratio limit in the transmit queue, the transmit rate will be limited by the transmit queue 0-3 ratio of the Port Control 10, 11, 12, and 13 registers. The highest priority queue will not be limited. Other lower priority queues will be limited based on the transmit queue ratio.

3.6.10 VLAN AND ADDRESS FILTERING

To prevent certain kinds of packets that could degrade the quality of the switch in applications such as voice over internet protocol (VoIP), the switch provides the mechanism to filter and map the packets with the following MAC addresses and VLAN IDs.

- Self-address packets
- Unknown unicast packets
- Unknown multicast packets
- Unknown VID packets
- Unknown IP multicast packets

The packets sourced from switch itself can be filtered out by enabling self-address filtering via the Global Control 18 Register Bit[6]. The self-address filtering will filter packets on the egress port; self MAC address is assigned in the Register 104-109 MAC Address Registers 0-5.

The unknown unicast packet filtering can be enabled by the Global Control Register 15 Bit[5] and Bits[4:0] specify the port map for forwarding.

The unknown multicast packet filtering can be enabled by the Global Control Register 16 Bit[5] and forwarding port map is specified in Bits[4:0].

The unknown VID packet filtering can be enabled by Global Control Register 17 Bit[5] with forwarding port map specified in Bits[4:0].

The unknown IP multicast packet filtering can be enable by Global Control Register 18 Bit[5] with forwarding port map specified in Bits[4:0].

Those filtering above are global based.

3.6.11 802.1X PORT-BASED SECURITY

IEEE 802.1x is a port-based authentication protocol. EAPOL is the protocol normally used by the authentication process as an uncontrolled port. By receiving and extracting special EAPOL frames, the microprocessor (CPU) can control whether the ingress and egress ports should forward packets or not. If a user port wants service from another port (authenticator), it must get approved by the authenticator. The KSZ8795CLX detects EAPOL frames by checking the destination address of the frame. The destination addresses should be either a multicast address as defined in IEEE 802.1x (01-80-C2-00-00-03) or an address used in the programmable reserved multicast address domain with offset -00-03. Once EAPOL frames are detected, the frames are forwarded to the CPU so it can send the frames to the authenticator server. Eventually, the CPU determines whether the requestor is qualified or not based on its MAC_Source addresses, and frames are either accepted or dropped.

When the KSZ8795CLX is configured as an authenticator, the ports of the switch must then be configured for authorization. In an authenticator-initiated port authorization, a client is powered up or plugs into the port, and the authenticator port sends an extensible authentication protocol (EAP) PDU to the supplicant requesting the identification of the supplicant. At this point in the process, the port on the switch is connected from a physical standpoint; however, the 802.1X process has not authorized the port and no frames are passed from the port on the supplicant into the switching fabric. If the PC attached to the switch did not understand the EAP PDU that it was receiving from the switch, it would not be able to send an ID and the port would remain unauthorized. In this state, the port would never pass any user traffic and would be as good as disabled. If the client PC is running the 802.1X EAP, it would respond to the request with its configured ID. This could be a user name/password combination or a certificate.

After the switch, the authenticator receives the ID from the PC (the supplicant). The KSZ8795CLX then passes the ID information to an authentication server (RADIUS server) that can verify the identification information. The RADIUS server responds to the switch with either a success or failure message. If the response is a success, the port will then be authorized and user traffic will be allowed to pass through the port like any switch port connected to an access device. If the response is a failure, the port will remain unauthorized and, therefore, unused. If there is no response from the server, the port will also remain unauthorized and will not pass any traffic.

© 2016-2017 Microchip Technology Inc.

3.6.11.1 Authentication Register and Programming Model

The port authentication control registers define the control of port-based authentication. The per-port authentication can be programmed in these registers. KSZ8795CLX provides three modes for implementing the IEEE 802.1x feature. Each mode can be selected by setting the appropriate bits in the port authentication registers.

When mode control bits AUTHENCIATION_MODE = 00 (pass mode), forced-authorization is enabled and a port is always authorized and does not require any messages from either the supplicant or the authentication server. This is typically the case when connecting to another switch, a router, or a server, and also when connecting to clients that do not support 802.1X. When ACL is enabled, all the packets are passed if they miss ACL rules, otherwise, ACL actions apply.

The block mode (when AUTHENCIATION_MODE = 01) is the standard port-based authentication mode. A port in this mode sends EAP packets to the supplicant and will not become authorized unless it receives a positive response from the authentication server. Traffic is blocked before authentication to all of the incoming packets, upon authentication, software will switch to pass mode to allow all the incoming packets. In this mode, the source address of incoming packets is not checked. Including the EAP address, the forwarding map of the entire reserved multicast addresses need to be configured to be allowed to be forwarded before and after authentication in lookup table. When ACL is enabled, packets except ACL hit are blocked.

The third mode is trap mode (when AUTHENTICATION_MODE = 11'b). In this mode, all the packets are sent to CPU port. If ACL is enabled, the missed packets would be forwarded to the CPU rather than dropped. All these per port features can be selected through the Port Control 5 register, Bit[2] is used to enable ACL, Bits[1:0] is for the modes selected.

3.6.12 ACL FILTERING

Access control lists (ACL) can be created to perform the protocol-independent Layer 2 MAC, Layer 3 IP, or Layer 4 TCP/UDP ACL filtering that filters incoming Ethernet packets based on ACL rule table. The feature allows the switch to filter customer traffic based on the source MAC address in the Ethernet header, the IP address in the IP header, and the port number and protocol in the TCP header. This function can be performed through MAC table and ACL rule table. Besides multicast filtering handled using entries in the static table, ACLs can be configured for all routed network protocols to filter the packets of those protocols as the packets pass through the switch. ACLs can prevent certain traffic from entering or exiting a network.

3.6.12.1 Access Control Lists

The KSZ8795CLX offers a rule-based ACL rule table. The ACL rule table is an ordered list of access control entries. Each entry specifies certain rules (a set of matching conditions and action rules) to permit or deny the packet access to the switch fabric. The meaning of ‘permit’ or ‘deny’ depends on the context in which the ACL is used. When a packet is received on an interface, the switch compares the fields in the packet against any applied ACLs to verify that the packet has the permissions required to be forwarded, based on the conditions specified in the lists.

The filter tests the packets against the ACL entries one-by-one. Usually the first match determines whether the router accepts or rejects packets. However, it is allowed to cascade the rules to form more robust and/or stringent requirements for incoming packets. ACLs allow switch filter ingress traffic based on the source, destination MAC address and Ethernet Type in the Layer 2 header, the source, and destination IP address in Layer 3 header, and port number, protocol in the Layer 4 header of a packet.

Each list consists of three parts:

- Matching Field
- Action Field
- Processing Field

The matching field specifies the rules that each packet matches against and the action field specifies the action taken if the test succeeds against the rules. Figure 3-11 shows the format of ACL and a description of the individual fields.

FIGURE 3-11: ACL FORMAT

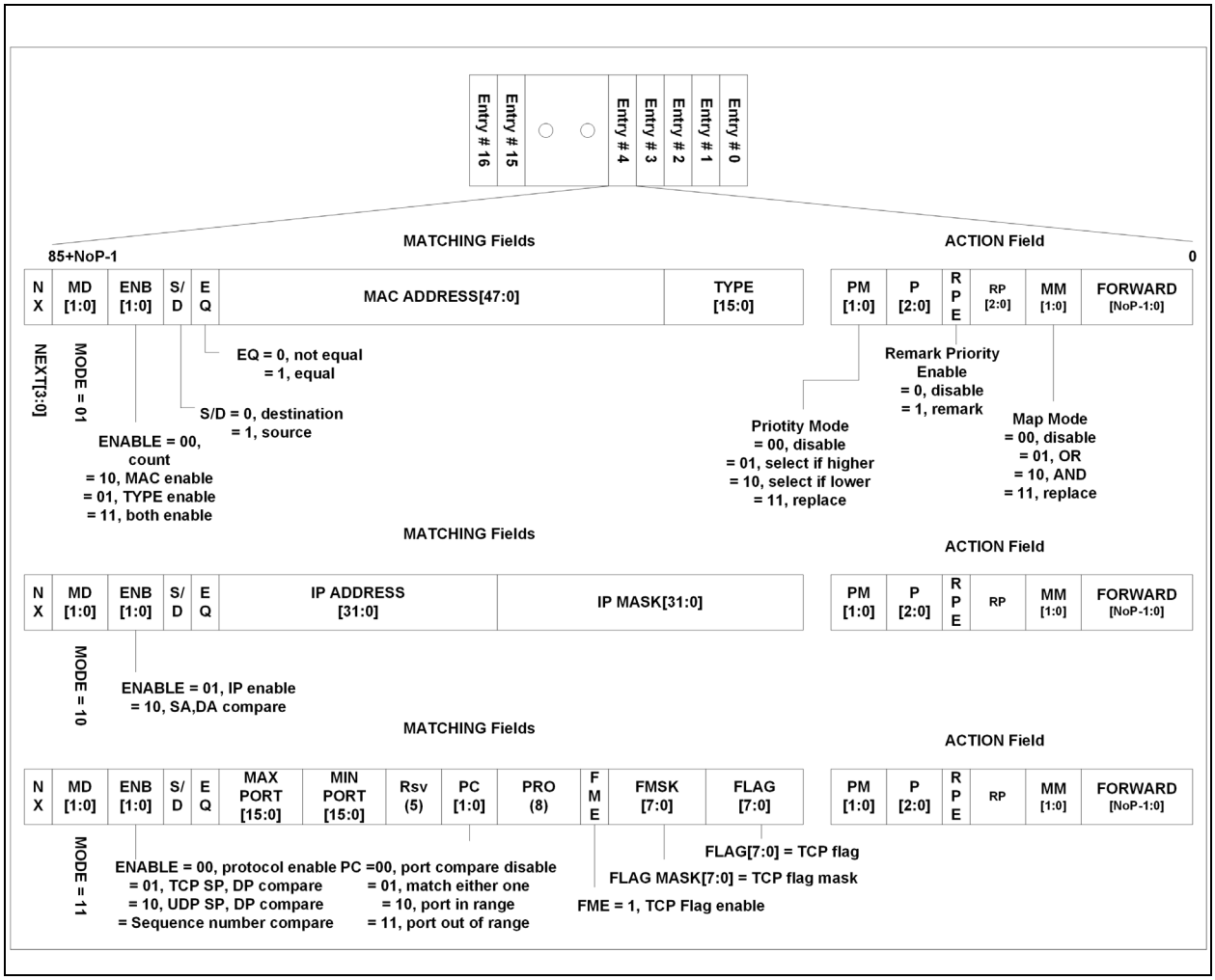

Matching Field

- MD [1:0]: MODE
  There are three modes of operation defined in ACL. Mode 0 disables the current rule list, Mode 1 is qualification rules for Layer 2 MAC header filtering, Mode 2 is used for Layer 3 IP address filtering and Mode 3 performs Layer 4 TCP port number/protocol filtering. While mode 0 is selected, there will be no action taken.
- ENB [1:0]: ENABLE
  Enables different rules in the current list.
  - When MD = 01
    While ENB = 00, the 11 bits of the aggregated bit field from PM, P, RPE, RP, MM in the action field specify a count value for packets matching the MAC address and TYPE in the matching fields.
    The count unit is defined in MSB of FORWARD bit field; while = 0, µs will be used and while = 1, ms will apply. The 2nd MSB of the FORWARD bit determines the algorithm used to generate an interrupt when the counter terminates. When = 0, an 11-bit counter will be loaded with the count value from the ACL list and starts counting down every unit of time. An interrupt will be generated when it expires, i.e., the next qualified packet has not been received within the period specified by the value.
    When = 1, the counter is incremented on every matched packet received and an interrupt is generated while terminal count reach the count value in the ACL list, the count resets thereafter.
    When ENB = 01, the MAC address bit field is participating in test; when ENB = 10, the MAC TYPE bit field is used for test; when ENB = 11, both the MAC address and type are tested against these bit fields in the list.
  - When MD = 10

© 2016-2017 Microchip Technology Inc.

If ENB = 01, the IP address and mask or IP protocol is enabled to be tested accordingly. If ENB = 10, source and destination addresses are compared. The drop/forward decision is based on the EQ bit setting.

- When MD = 11
  If ENB = 00, protocol comparison is enabled.
  If ENB = 01, TCP address comparison is selected.
  If ENB = 10, UDP address comparison is selected.
  If ENB = 11, the sequence number of the TCP is compared.

- S/D: Source or Destination Select
  - When = 0, the destination address/port is used to compare; and when = 1, the source is chosen.
- E/Q: Comparison Algorithm
  - When = 0, a match if they are not equal. When = 1, a match if they are equal.
- MAC Address [47:0]
  - MAC source or destination address
- TYPE [15:0]
  - MAC ether type.
- IP Address [31:0]
  - IP source or destination address.
- IP Mask [31:0]
  - IP address mask for group address filtering.
- MAX Port [15:0], MIN Port [15:0]/Sequence Number [31:0]
  - The range of TCP port number or sequence number matching.
- PC [1:0]: Port Comparison
  - When = 00, the comparison is disabled; when = 01, matches either one of MAX or MIN; when = 10, a match if the port number is in the range of MAX to MIN; and when = 11, a match if the port number is out of the range.
- PRO [7:0]
  - IP Protocol to be matched.
- FME
  - Flag Match Enable – When = 1, enable TCP FLAG matching.
- FLAG [5:0]
  - TCP Flag to be matched.

Action Field

- PM [1:0]: Priority Mode
  - When = 00, no priority is selected, the priority is determined by the QoS/Classification is used. When = 01, the priority in P bit field is used if it is greater than QoS result. When = 10, the priority in P bit field is used if it is smaller than QoS result. When = 11, the P bit field will replace the priority determined by QoS.
- P [2:0]
  - Priority.
- RPE: Remark Priority Enable
  - When = 0, no remarking is necessary. When = 1, the VLAN priority bits in the tagged packets are replaced by RP bit field in the list.
- RP [2:0]
  - Remarked priority.
- MM [1:0]: Map Mode
  - When = 00, no forwarding remapping is necessary. When = 01, the forwarding map in FORWORD is OR'ed with the Forwarding map from the look-up table. When = 10, the forwarding map in FORWORD is AND'ed with the Forwarding map from the look-up table. When = 11, the forwarding map in FORWORD replaces the forwarding map from the look-up table.
- FORWARD Bits[4:0]: Forwarding Port(s) - Each bit indicates the forwarding decision of one port.

Processing Field

- FRN Bits[3:0]: First Rule Number
  - Assign which entry with its Action Field in 16 entries is used in the rule set.
- RULESET Bits[15:0]: Rule Set

- Group of rules to be qualified, there are 16 entries rule can be assigned to a rule set per port by the two rule-set registers. The rule table allows the rules to be cascaded. There are 16 entries in the RTB. Each entry can be a rule on its own, or can be cascaded with other entries to form a rule set. The test result of incoming packets against rule set will be the AND'ed result of all the test result of incoming packets against the rules included in this rule set. The action of the rule set will be the action of the first rule specified in FRN field. The rule with higher priority will have lower index number. Or rule 0 is the highest priority rule and rule 15 is the lowest priority. ACL rule table entry is disabled when mode bits are set to 2'b00.
  A rule set (RULESET) is used to select the match results of different rules against incoming packets. These selected match results will be AND'ed to determine whether the frame matches or not. The conditions of different rule sets having the same action will be OR'ed for comparison with frame fields, and the CPU will program the same action to those rule sets that are to be OR'ed together. For matched rule sets, different rule sets having different actions will be arbitrated or chosen based upon the first rule number (FRN) of each rule set. The rule table will be set up with the high priority rule at the top of the table or with the smaller index. Regardless whether the matched rule sets have the same or different action, the hardware will always compare the first rule number of different rule sets to determine the final rule set and action.

3.6.12.2 DOS Attack Prevention via ACL

The ACL can provide certain detection/protection of the following denial of service (DoS) attack types based on rule setting, which can be programmed to drop or not to drop each type of DoS packet respectively.

Example 1

When MD = 10, ENABLE = 10, setting EQ bit to 1 can determine the drop or forward packets with identical source and destination IP addresses in IPv4/IPv6.

Example 2

When MD = 11, ENABLE = 01/10, setting EQ bit to 1 can determine the drop or forward packets with identical source and destination TCP/UDP Ports in IPv4/IPv6.

Example 3

When MD = 11, ENABLE = 11, Sequence Number = 0, FME = 1, FMSK = 00101001, FLAG = xx1x1xx1, Setting the EQ bit to 1 will drop/forward the all packets with a TCP sequence number equal to 0, and flag bit URG = 1, PSH = 1 and FIN = 1.

Example 4

When MD = 11, ENABLE = 01, MAX Port = 1024, MIN Port = 0, FME = 1, FMSK = 00010010, FLAG = xxx0xx1x, Setting the EQ bit to 1 will drop/forward the all packets with a TCP Port number ≤ 1024, and flag bit URB = 0, SYN = 1.

ACL related registers list as:

- The Register 110 (0x6E), the Register 111 (0x6F) and the ACL rule tables.

© 2016-2017 Microchip Technology Inc.

4.0 DEVICE REGISTERS

The KSZ8795CLX device has a rich set of registers available to manage the functionality of the device. Access to these registers is via the MIIM or SPI interfaces. Figure 4-1 provides a global picture of accessibility via the various interfaces and addressing ranges from the perspective of each interface.

FIGURE 4-1: INTERFACE AND REGISTER MAPPING

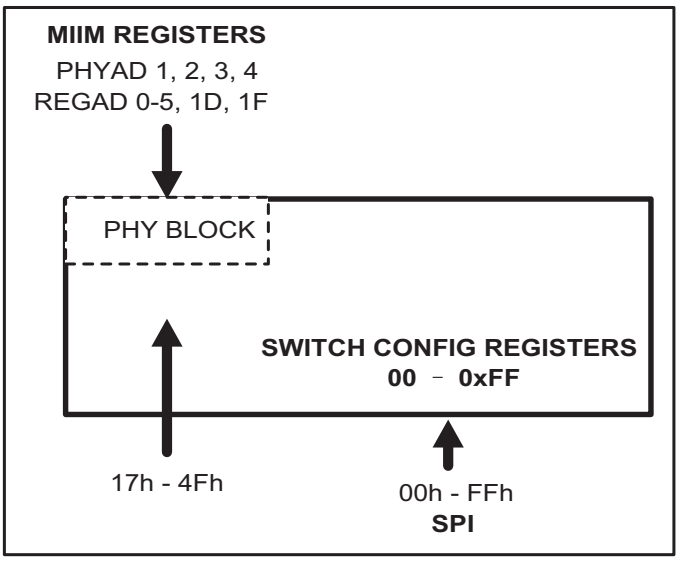

The registers within the linear 0x00-0xFF address space are all accessible via the SPI interface by a CPU attached to that bus. The mapping of the various functions within that linear address space is summarized in Table 4-1.

TABLE 4-1: MAPPING OF FUNCTIONAL AREAS WITHIN THE ADDRESS SPACE

Register Locations	Device Area	Description
0x00 - 0xFF	Switch Control and Configuration	Registers which control the overall functionality of the Switch, MAC, and PHYs
0x6E - 0x6F	Indirect Control Registers	Registers used to indirectly address and access distinct areas within the device. - Management Information Base (MIB) Counters - Static MAC Address Table - Dynamic MAC Address Table - VLAN Table - PME Indirect Registers - ACL Indirect Registers - EEE Indirect Registers
0x70 - 0x78	Indirect Access Registers	Registers used to indirectly address and access four distinct areas within the device. - Management Information Base (MIB) Counters - Static MAC Address Table - Dynamic MAC Address Table - VLAN Table
0xA0	Indirect Byte Access Registers	This indirect byte register is used to access: - PME Indirect Registers - ACL Indirect Registers - EEE Indirect Registers

TABLE 4-1: MAPPING OF FUNCTIONAL AREAS WITHIN THE ADDRESS SPACE (CONTINUED)

Register Locations	Device Area	Description
0x17 - 0x4F	PHY1 to PHY4 MIIM Registers Mapping to Those Port Registers' Address Range	The same PHY registers as specified in IEEE 802.3 specification.

4.1 Register Map

TABLE 4-2: DIRECT REGISTERS

Address	Contents
0x00-0x01	Family ID, Chip ID, Revision ID, and start switch Registers
0x02-0x0D	Global Control Registers 0 – 11
0x0E-0x0F	Global Power-Down Management Control Registers
0x10-0x14	Port 1 Control Registers 0 – 4
0x15	Port 1 Authentication Control Register
0x16-0x18	Port 1 Reserved (Factory Test Registers)
0x19-0x1F	Port 1 Control/Status Registers
0x20-0x24	Port 2 Control Registers 0 – 4
0x25	Port 2 Authentication Control Register
0x26-0x28	Port 2 Reserved (Factory Test Registers)
0x29-0x2F	Port 2 Control/Status Registers
0x30-0x34	Port 3 Control Registers 0 – 4
0x35	Port 3 Authentication Control Register
0x36-0x38	Port 3 Registered (Factory Test Registers)
0x39-0x3F	Port 3 Control/Status Registers
0x40-0x44	Port 4 Control Registers 0 – 4
0x45	Port 4 Authentication Control Register
0x46-0x48	Port 4 Reserved (Factory Test Registers)
0x49-0x4F	Port 4 Control/Status Registers
0x50-0x54	Port 5 Control Registers 0 – 4
0x56-0x58	Port 5 Reserved (Factory Test Registers)
0x59-0x5F	Port 5 Control/Status Registers
0x60-0x67	Reserved (Factory Testing Registers)
0x68-0x6D	MAC Address Registers
0x6E-0x6F	Indirect Access Control Registers
0x70-0x78	Indirect Data Registers
0x79-0x7B	Reserved (Factory Testing Registers)
0x7C-0x7D	Global Interrupt and Mask Registers
0x7E-0x7F	ACL Interrupt Status and Control Registers
0x80-0x87	Global Control Registers 12 – 19
0x88	Switch Self-Test Control Register
0x89-0x8F	QM Global Control Registers
0x90-0x9F	Global TOS Priority Control Registers 0 - 15
0xA0	Global Indirect Byte Register
0xA0-0xAF	Reserved (Factory Testing Registers)
0xB0-0xBE	Port 1 Control Registers

© 2016-2017 Microchip Technology Inc.

TABLE 4-2: DIRECT REGISTERS (CONTINUED)

Address	Contents
0xBF	Reserved (Factory Testing Register): Transmit Queue Remap Base Register
0xC0-0xCE	Port 2 Control Registers
0xCF	Reserved (Factory Testing Register)
0xD0-0xDE	Port 3 Control Registers
0xDF	Reserved (Factory Testing Register)
0xE0-0xEE	Port 4 Control Registers
0xEF	Reserved (Factory Testing Register)
0xF0-0xFE	Port 5 Control Registers
0xFF	Reserved (Factory Testing Register)

TABLE 4-3: GLOBAL REGISTERS

Address	Name	Description	Mode	Default
Register 0 (0x00): Chip ID0				
7 – 0	Family ID	Chip family.	RO	0x87
Register 1 (0x01): Chip ID1/Start Switch				
7 – 4	Chip ID	0x9 = 8795	RO	0x9
3 – 1	Revision ID	—	RO	0x0
0	Start Switch	1 = Start the switch function of the chip. 0 = Stop the switch function of the chip.	R/W	1
Register 2 (0x02): Global Control 0				
7	New Back-Off Enable	New Back-off algorithm designed for UNH 1 = Enable 0 = Disable	R/W	0
6	Global Soft Reset Enable	Global Software Reset 1 = Enable to reset all FSM and data path (not configuration). 0 = Disable reset. **Note:** This reset will stop to receive packets if it is being in the traffic. All registers keep their configuration values.	R/W	0
5	Flush Dynamic MAC Table	Flush the entire dynamic MAC table for RSTP. This bit is self- clear (SC). 1 = Trigger the flush dynamic MAC table operation. 0 = Normal operation. **Note:** All the entries associated with a port that has its learning capability being turned off (learning disable) will be flushed. If you want to flush the entire table, all ports learning capability must be turned off.	R/W (SC)	0

TABLE 4-3: GLOBAL REGISTERS (CONTINUED)

Address	Name	Description	Mode	Default
4	Flush Static MAC Table	Flush the matched entries in static MAC table for RSTP 1 = Trigger the flush static MAC table operation. 0 = Normal operation. **Note:** The matched entry is defined as the entry in the Forwarding ports field contains a single port and MAC address with unicast. This port, in turn, has its learning capability being turned off (learning disable). Per port, multiple entries can be qualified as matched entries.	R/W (SC)	0
3	Reserved	N/A Don't change	RO	1
2	Reserved	N/A Don't change	RO	1
1	UNH Mode	1 = The switch will drop packets with 0x8808 in the T/L filed, or DA = 01-80-C2-00-00-01. 0 = The switch will drop packets qualified as "flow control" packets.	R/W	0
0	Link Change Age	1 = Link change from "link" to "no link" will cause fast aging (<800 µs) to age address table faster. After an age cycle is complete, the age logic will return to normal (300 ±75 seconds). **Note:** If any port is unplugged, all addresses will be automatically aged out.	R/W	0
Register 3 (0x03): Global Control 1				
7	Reserved	N/A Don't change.	RO	0
6	2KB Packet Support	1 = Enable 2KB packet support. 0 = Disable 2KB packet support.	R/W	0
5	IEEE 802.3x Transmit Flow Control Disable	0 = Enables transmit flow control based on AN result. 1 = Will not enable transmit flow control regardless of the AN result.	R/W	0
4	IEEE 802.3x Receive Flow Control Disable	0 = Enables receive flow control based on AN result. 1 = Will not enable receive flow control regardless of the AN result. **Note:** Bit[5] and Bit[4] default values are controlled by the same pin, but they can be programmed independently.	R/W	0
3	Frame Length Field Check	1 = Check frame length field in the IEEE packets. If the actual length does not match, the packet will be dropped (for L/T <1500).	R/W	0
2	Aging Enable	1 = Enable aging function in the chip. 0 = Disable aging function.	R/W	1
1	Fast-Age Enable	1 = Turn on fast aging (800 µs).	R/W	0
0	Aggressive Back-Off Enable	1 = Enable more aggressive back-off algorithm in half duplex mode to enhance performance. This is not in the IEEE standard.	R/W	0

© 2016-2017 Microchip Technology Inc.

TABLE 4-3: GLOBAL REGISTERS (CONTINUED)

Address	Name	Description	Mode	Default
Register 4 (0x04): Global Control 2				
7	Unicast Port-VLAN Mismatch Discard	This feature is used for port VLAN (described in Port Control 1 Register). 1 = All packets cannot cross VLAN boundary. 0 = Unicast packets (excluding unknown/multicast/broadcast) can cross VLAN boundary. **Note:** When mirroring is enabled, the single-destination packets will be dropped if it's mirrored to another port.	R/W	1
6	Multicast Storm Protection Disable	1 = "Broadcast Storm Protection" does not include multicast packets. Only DA = FFFFFFFFFFFF packets will be regulated. 0 = "Broadcast Storm Protection" includes DA = FFFFFFFFFFFF and DA[40] = 1 packet.	R/W	1
5	Back Pressure Mode	1 = Carrier-sense-based back pressure is selected. 0 = Collision-based back pressure is selected.	R/W	1
4	Flow Control and Back Pressure Fair Mode	1 = Fair mode is selected. In this mode, if a flow control port and a non-flow control port talk to the same destination port, then packets from the non-flow control port may be dropped. This is to prevent the flow control port from being flow controlled for an extended period of time. 0 = In this mode, if a flow control port and a non-flow control port talk to the same destination port, the flow control port will be flow controlled. This may not be "fair" to the flow control port.	R/W	1
3	No Excessive Collision Drop	1 = The switch will not drop packets when 16 or more collisions occur. 0 = The switch will drop packets when 16 or more collisions occur.	R/W	0
2	Reserved	N/A Don't change.	RO	0
1	Legal Maximum Packet Size Check Disable	1 = Enables acceptance of packet sizes up to 1536 bytes (inclusive). 0 = 1522 bytes for tagged packets (not including packets with STPID from CPU to Ports 1-4), 1518 bytes for untagged packets. Any packets larger than the specified value will be dropped.	R/W	0
0	Reserved	N/A	RO	0
Register 5 (0x05): Global Control 3				
7	802.1q VLAN Enable	1 = 802.1q VLAN mode is turned on. VLAN table needs to be set up before the operation. 0 = 802.1q VLAN is disabled.	R/W	0
6	IGMP Snoop Enable on Switch Port 5 SW5-GMII/RGMII/MII/RMII Interface	1 = IGMP Snoop enabled. All the IGMP packets will be forwarded to the processor via Switch Port 5 GMII/RGMII/MII/RMII interface. 0 = IGMP Snoop disabled.	R/W	0
5 – 1	Reserved	N/A Don't change.	RO	00000

TABLE 4-3: GLOBAL REGISTERS (CONTINUED)

Address	Name	Description	Mode	Default
0	Sniff Mode Select	1 = Enables Rx AND Tx sniff (both source port and destination port need to match). 0 = Enables Rx OR Tx sniff (Either source port or destination port need to match). **Note:** Default is used to implement Rx only sniff.	R/W	0
Register 6 (0x06): Global Control 4				
7	Switch SW5-MII/RMII Back Pressure Enable	1 = Enable half-duplex back pressure on the switch MII/RMII interface. 0 = Disable back pressure on the switch MII interface.	R/W	0
6	Switch SW5-MII/RMII Half-Duplex Mode	1 = Enable MII/RMII interface half-duplex mode. 0 = Enable MII/RMII interface full-duplex mode.	R/W	0
5	Switch SW5-MII/RMII Flow Control Enable	1 = Enable full-duplex flow control on the switch MII/RMII interface. 0 = Disable full-duplex flow control on the switch MII/RMII interface.	R/W	0
4	Switch SW5-MII/RMII Speed	1 = The switch SW5-MII/RMII is in 10 Mbps mode. 0 = The switch SW5-MII/RMII is in 100 Mbps mode.	R/W	0
3	Null VID Replacement	1 = Replace null VID with Port VID (12 bits). 0 = No replacement for null VID.	R/W	0
2 – 0	Broadcast Storm Protection Rate Bit[10:8]	This register, along with the next register, determines how many “64 byte blocks” of packet data are allowed on an input port in a preset period. The period is 50 ms for 100BT or 500 ms for 10BT. The default is 1%.	R/W	000
Register 7 (0x07): Global Control 5				
7 – 0	Broadcast Storm Protection Rate Bits[7:0]	This register, along with the previous register, determines how many “64-byte blocks” of packet data are allowed on an input port in a preset period. The period is 50 ms for 100BT or 500 ms for 10BT. The default is 1%. **Note:** 148,800 frames/sec × 50 ms/interval × 1% = 74 frames/interval (approx.) = 0x4A.	R/W	0x4A
Register 8 (0x08): Global Control 6 MIB Control				
7	Flush Counter	1 = All the MIB counter of enabled Port(s) will be reset to 0. This bit is self-cleared after the operation finishes. 0 = No reset of the MIB counter.	R/W (SC)	0
6	Freeze Counter	1 = Enabled Port(s) will stop counting. 0 = Enabled Port(s) will not stop counted.	R/W	0
5	Reserved	N/A Don’t change.	RO	0
4 – 0	Control Enable	1 = Enable flush and freeze for each port. Bit[4] is for Port 5 Flush + Freeze. Bit[3] is for Port 4 Flush + Freeze. Bit[2] is for Port 3 Flush + Freeze. Bit[1] is for Port 2 Flush + Freeze. Bit[0] is for Port 1 Flush + Freeze. 0 = Disable flush and freeze.	R/W	0

© 2016-2017 Microchip Technology Inc.

TABLE 4-3: GLOBAL REGISTERS (CONTINUED)

Address	Name	Description	Mode	Default
Register 9 (0x09): Global Control 7				
7 - 0	Factory Testing	N/A Don't Change	RO	0x40
Register 10 (0x0A): Global Control 8				
7 - 0	Factory Testing	N/A Don't Change	RO	0x00
Register 11 (0x0B): Global Control 9				
7	Reserved	N/A Don't Change	RO	0
6	Port 5 SW5- RMII Reference Clock Edge Select	Select the data sampling edge of the SW5- RMII reference clock: 1 = Data sampling on the negative edge of REFCLK. 0 = Data sampling on the positive edge of REFCLK (default).	R/W	0
5 – 4	LED Mode	Programmable LED output to indicate port's activity/status using 2 bits of the control register. LED is ON (active) when the output is LOW; the LED is OFF (inactive) when the output is HIGH. LINK = LED ON; ACT = LED Blink; LINK/ACT = LED On/Blink. Speed = LED ON (100BT); LED OFF (10BT); LED Blink (1000BT reserved). Duplex = LED ON (Full duplex); LED OFF (half duplex).	R/W	00
3	Reserved	N/A Don't change.	RO	0
2	Reserved	N/A Don't change.	RO	0
1	REFCLKO Enable	1 = Enable REFCLKO pin clock output 0 = Disable REFCLKO pin clock output. Strap-in option: LED2_0 PU = REFCLK_O (25 MHz) is enabled. (Default) PD = REFCLK_O is disabled **Note:** This is an additional clock; this clock can save an oscillator if system needs this clock source. If the system doesn't need this 25 MHz clock source, which should be disabled.	R/W	0
0	SPI Read Sampling Clock Edge Select	Select the SPI clock edge for sampling SPI read data. 1 = Trigger on the rising edge of SPI clock (for higher speed SPI) 0 = Trigger on the falling edge of SPI clock.	R/W	0
Register 12 (0x0C): Global Control 10				
7 – 6	Reserved	Reserved	RO	01

TABLE 4-3: GLOBAL REGISTERS (CONTINUED)

Address	Name	Description	Mode	Default
5 – 2	Reserved	N/A Don't change.	RO	0001
1	Tail Tag Enable	Tail Tag feature is applied for Port 5 only. 1 = Insert 1 Byte of data right before FCS. 0 = Do not insert.	R/W	0
0	Pass Flow Control Packet	1 = Switch will not filter 802.3x "flow control" packets. 0 = Switch will filter 802.3x "flow control" packets.	R/W	0
Register 13 (0x0D): Global Control 11				
7 – 0	Factory Testing	N/A Don't change.	RO	00000000
Register 14 (0x0E): Power-Down Management Control 1				
7 – 6	Reserved	N/A Don't change.	RO	00
5	PLL Power-Down	Pll Power-Down Enable: 1 = Enable 0 = Disable **Note:** It occurs in the energy detect mode (EDPD mode)	R/W	0
4 – 3	Power Management Mode Select	Power Management Mode : 00 = Normal mode (D0) 01 = Energy detection mode (D2) 10 = Soft power-down mode (D3) 11 = Reserved **Note:** RC means Read Clear.	R/W (RC)	00
2 – 0	Reserved	N/A Don't change.	RO	000
Register 15 (0x0F): Power-Down Management Control 2				
7 - 0	Go_Sleep_Time [7:0]	When the energy-detect mode is on, this value is used to control the minimum period that the no energy event has to be detected consecutively before the device enters the low power state. The unit is 20 ms. The default of go_sleep time is 1.6 seconds (80 Dec × 20 ms).	R/W	01010000

4.2 Port Registers

The following registers are used to enable features that are assigned on a per port basis. The register bit assignments are the same for all ports, but the address for each port is different, as indicated.

TABLE 4-4: PORT REGISTERS

Address	Name	Description	Mode	Default
Register 16 (0x10): Port 1 Control 0 **Register 32 (0x20): Port 2 Control 0** **Register 48 (0x30): Port 3 Control 0** **Register 64 (0x40): Port 4 Control 0** **Register 80 (0x50): Port 5 Control 0**				
7	Broadcast Storm Protection Enable	1 = Enable broadcast storm protection for ingress packets on the port. 0 = Disable broadcast storm protection.	R/W	0

© 2016-2017 Microchip Technology Inc.

TABLE 4-4: PORT REGISTERS (CONTINUED)

Address	Name	Description	Mode	Default
6	DiffServ Priority Classification Enable	1 = Enable DiffServ priority classification for ingress packets on port. 0 = Disable DiffServ function.	R/W	0
5	802.1p Priority Classification Enable	1 = Enable 802.1p priority classification for ingress packets on port. 0 = Disable 802.1p priority classification for ingress packets on port.	R/W	0
4 – 3	Port-Based Priority Classification Enable	00 = Ingress packets on Port will be classified as priority 0 queue if “Diffserv” or “802.1p” classification is not enabled or fails to classify. 01 = Ingress packets on port will be classified as priority 1 queue if “Diffserv” or “802.1p” classification is not enabled or fails to classify. 10 = Ingress packets on port will be classified as priority 2 queue if “Diffserv” or “802.1p” classification is not enabled or fails to classify. 11 = Ingress packets on port will be classified as priority 3 queue if “Diffserv” or “802.1p” classification is not enabled or fails to classify. **Note:** “DiffServ”, “802.1p” and port priority can be enabled at the same time. The OR’ed result of 802.1p and DSCP overwrites the Port priority.	R/W	00
2	Tag insertion	1 = When packets are output on the port, the switch will add 802.1q tags to packets without 802.1q tags when received. The switch will not add tags to packets already tagged. The tag inserted is the ingress port’s “Port VID.” 0 = Disable tag insertion.	R/W	0
1	Tag Removal	1 = When packets are output on the port, the switch will remove 802.1q tags from packets with 802.1q tags when received. The switch will not modify packets received without tags. 0 = Disable tag removal.	R/W	0
0	Two Queues Split Enable	This Bit[0] in Registers16/32/48/64/80 should be in combination with Registers177/193/209/225/241 Bit[1] for Ports 1 – 5. This will select the split of 1, 2, and 4 queues: For Port 1, Register 177 Bit[1], Register 16 Bit[0]: 11 = Reserved 10 = The port output queue is split into four priority queues or if map 802.1p to priority 0 – 3 mode. 01 = The port output queue is split into two priority queues or if map 802.1p to priority 0 – 3 mode. 00 = Single output queue on the port. There is no priority differentiation even though packets are classified into high or low priority.	R/W	0

TABLE 4-4: PORT REGISTERS (CONTINUED)

Address	Name	Description	Mode	Default
Register 17 (0x11): Port 1 Control 1 **Register 33 (0x21): Port 2 Control 1** **Register 49 (0x31): Port 3 Control 1** **Register 65 (0x41): Port 4 Control 1** **Register 81 (0x51): Port 5 Control 1**				
7	Sniffer Port	1 = Port is designated as Sniffer port and will transmit packets that are monitored. 0 = Port is a normal port.	R/W	0
6	Receive Sniff	1 = All the packets received on the port will be marked as “monitored packets” and forwarded to the designated “Sniffer port.” 0 = No receive monitoring.	R/W	0
5	Transmit Sniff	1 = All the packets transmitted on the port will be marked as “monitored packets” and forwarded to the designated “Sniffer port.” 0 = No transmit monitoring.	R/W	0
4 – 0	Port VLAN Membership	Defines the port’s Port VLAN membership. Bit[4] stands for Port 5, Bit[3] stands for Port 4, Bit[2] stands for Port 3, Bit[1] stands for Port 2, Bit[0] stands for Port 1. The port can only communicate within the membership. A ‘1’ includes a port in the membership; a ‘0’ excludes a port in the membership.	R/W	0x1f
Register 18 (0x12): Port 1 Control 2 **Register 34 (0x22): Port 2 Control 2** **Register 50 (0x32): Port 3 Control 2** **Register 66 (0x42): Port 4 Control 2** **Register 82 (0x52): Port 5 Control 2**				
7	User Priority Ceiling	1 = If packet ‘s “user priority field” is greater than the “user priority field” in the port default tag register, replace the packet’s “user priority field” with the “user priority field” in the port default tag Register Control 3. 0 = No replace packet’s priority filed with port default tag priority filed of the port Control 3 Register Bits[7:5].	R/W	0
6	Ingress VLAN Filtering.	1 = The switch will discard packets whose VID port membership in VLAN table Bits[11:7] does not include the ingress port. 0 = No ingress VLAN filtering.	R/W	0
5	Discard Non-PVID Packets	1 = The switch will discard packets whose VID does not match ingress port default VID. 0 = No packets will be discarded.	R/W	0
4	Force Flow Control	1 = Enables Rx and Tx flow control on the port, regardless of the AN result. 0 = Flow control is enabled based on the AN result (Default)	R/W	0
3	Back Pressure Enable	1 = Enable port half-duplex back pressure. 0 = Disable port half-duplex back pressure.	R/W	0
2	Transmit Enable	1 = Enable packet transmission on the port. 0 = Disable packet transmission on the port.	R/W	1

© 2016-2017 Microchip Technology Inc.

TABLE 4-4: PORT REGISTERS (CONTINUED)

Address	Name	Description	Mode	Default
1	Receive Enable	1 = Enable packet reception on the port. 0 = Disable packet reception on the port.	R/W	1
0	Learning Disable	1 = Disable switch address learning capability. 0 = Enable switch address learning.	R/W	0
Register 19 (0x13): Port 1 Control 3 **Register 35 (0x23): Port 2 Control 3** **Register 51 (0x33): Port 3 Control 3** **Register 67 (0x43): Port 4 Control 3** **Register 83 (0x53): Port 5 Control 3**				
7 – 0	Default Tag [15:8]	Port's default tag, containing: 7– 5: User priority bits 4: CFI bit 3 – 0: VID[11:8]	R/W	0
Register 20 (0x14): Port 1 Control 4 **Register 36 (0x24): Port 2 Control 4** **Register 52 (0x34): Port 3 Control 4** **Register 68 (0x44): Port 4 Control 4** **Register 84 (0x54): Port 5 Control 4**				
7 – 0	Default Tag [7:0]	Default Port 1's tag, containing: 7 – 0: VID[7:0]	R/W	1
Registers 19 and 20 (and those corresponding to other ports) serve two purposes: - Associated with the ingress untagged packets and used for egress tagging. - Default VID for the ingress untagged or null-VID-tagged packets and used for address look-up.				
Register 21 (0x15): Port 1 Control 5 **Register 37 (0x25): Port 2 Control 5** **Register 53 (0x35): Port 3 Control 5** **Register 69 (0x45): Port 4 Control 5** **Register 85 (0x55): Port 5 Control 5**				
7 – 3	Reserved	N/A Don't change.	RO	00000
2	ACL Enable	1 = Enable ACL 0 = Disable ACL	R/W	0
1 – 0	AUTHENTICATION_-MODE	These bits control port-based authentication: 00, 10 = Authentication disable, all traffic is allowed (forced-authorized), if ACL is enabled, pass all traffic if ACL missed 01 = Authentication enabled, all traffic is blocked, if ACL is enabled, traffic is blocked if ACL missed 11 = Authentication enabled, all traffic is trapped to CPU port, if ACL is enabled, traffic is trapped to port 5 CPU port only if ACL missed.	R/W	00
Register 22 (0x16): Reserved **Register 38 (0x26): Reserved** **Register 54 (0x36): Reserved** **Register 70 (0x46): Reserved** **Register 86 (0x56): Port 5 Interface Control 6**				
7	RMII_CLK_SEL	Port 5 SW5-RMII Mode Select 1 = RMII uses internal clock (clock mode) 0 = RMII uses external clock (normal mode) Strap-in option: LED2_1 PU = SW5-RMII is in the clock mode (Default) PD = SW5-RMII is in the normal mode. **Note:** This pin has an internal pull-up	R/W	1

TABLE 4-4: PORT REGISTERS (CONTINUED)

Address	Name	Description	Mode	Default
6	Is_1Gbps	1 = 1Gbps is chosen for Port 5 in GMII/RGMII mode. 0 = 10/100 Mbps is chosen for Port 5 in GMII/RGMII mode. Strap-in option: LED1_0 PU = 1Gbps in SW5-GMII/RGMII mode (Default) PD = 10/100 Mbps in SW5-GMII/RGMII mode **Note:** This pin has an internal pull-up. Use Bit[4] of the Register 6, Global Control 4 to set for 10 or 100 speed in 10/100 Mbps mode.	R/W	1
5	Reserved	N/A Don't change.	RO	1
4	RGMII Internal Delay (ID) Ingress Enable	Enable Ingress RGMII-ID Mode 1 = Ingress RGMII-ID enabled. An internal delay is added to ingress clock input. 0 = No delay is added, only clock to data skew applied. **Note:** If RGMII connection partner transmit data to clock skew is in standard spec ±0.5 ns without delay inserted on PCB, then set bit [4] ='1' will enable an ingress delay to meet the input skew min 1ns to max 2.6 ns requirement (the clock trace should be equal length with data traces in PCB layout).	R/W	0
3	RGMII Internal Delay (ID) Egress Enable	Enable Egress RGMII-ID Mode 1 = Egress RGMII-ID enabled. An internal delay is added to egress clock output. 0 = No delay is added, only clock to data skew applied. **Note:** If setting bit [3] = '1', RGMII transmit clock adds an internal egress delay to add min 1 ns data to clock skew to receive side, then the receiving side may or may not add any internal delay to meet its own receiving timing requirement. (The clock trace should be equal length with data traces in PCB layout if no additional external skew on clock is needed).	R/W	1

© 2016-2017 Microchip Technology Inc.

TABLE 4-4: PORT REGISTERS (CONTINUED)

Address	Name	Description	Mode	Default
2	GMII/MII Mode Select	Port 5 GMAC5 SW5-GMII/MII Mode Select 1 = GMII/MII is in GMAC/MAC mode (Default). 0 = GMII/MII is in GPHY/PHY mode. Strap-in option: LED2_1 PU = GMII/MII is in GMAC/MAC mode. (Default) PD = GMII/MII is in GPHY/PHY mode. **Note:** When set GMAC5 SW5-GMII to GPHY mode, the CRS and COL pins will change from the input to output. When set SW5-MII to PHY mode, the CRS, COL, RXC and TXC pins will change from the input to output.	R/W	1
1 – 0	Interface Mode Select **Note:** This is for port 5 SW5-GMII/RGMII/MII/RMII	These bits select the interface type and mode for Switch Port 5 (SW5). Port 5 Mode Select: 00 = MII 01 = RMII 10 = GMII 11 = RGMII. Strap-in option: LED3[1:0] 00 = MII 01 = RMII 10 = GMII 11 = RGMII (Default) **Note:** These pins have internal pull-ups.	R/W	11
Register 23 (0x17): Port 1 Control 7 **Register 39 (0x27): Port 2 Control 7** **Register 55 (0x37): Port 3 Control 7** **Register 71 (0x47): Port 4 Control 7** **Register 87 (0x57): Reserved**		(Note 4-1)		
7 – 6	Reserved	N/A Don't Change.	RO	00
5 – 4	Advertised_Flow_Control _Capability	These bits indicate that the KSZ8795CLX has implemented both the optional MAC control sublayer and the PAUSE function as specified in IEEE Clause 31 and Annex 31B for full duplex operation independent of rate and medium. 00 = No pause 01 = Symmetric PAUSE 10 = Asymmetric PAUSE toward link partner toward link partner 11 = Both Symmetric PAUSE and Asymmetric PAUSE toward local devices Bit[5] indicates that asymmetric PAUSE is supported. The value of Bit[4] when Bit[5] is set indicates the direction of the PAUSE frames that are supported for flow across the link. Asymmetric PAUSE configuration results in independent enabling of the PAUSE receive and PAUSE transmit functions as defined by IEEE Annex 31B.	R/W	11

TABLE 4-4: PORT REGISTERS (CONTINUED)

Address	Name	Description	Mode	Default
3	Advertised 100BT Full-Duplex Capability	1 = Advertise 100BT full-duplex capability. 0 = Suppress 100BT full-duplex capability from transmission to link partner.	R/W	1
2	Advertised 100BT Half-Duplex Capability	1 = Advertise 100BT half-duplex capability. 0 = Suppress 100BT half-duplex capability from transmission to link partner.	R/W	1
1	Advertised 10BT Full-Duplex Capability	1 = Advertise 10BT full-duplex capability. 0 = Suppress 10BT full-duplex capability from transmission to link partner.	R/W	1
0	Advertised 10BT Half-Duplex Capability	1 = Advertise 10BT half-duplex capability. 0 = Suppress 10BT half-duplex capability from transmission to link partner.	R/W	1
Register 24 (0x18): Port 1 Status 0 **Register 40 (0x28): Port 2 Status 0** **Register 56 (0x38): Port 3 Status 0** **Register 72 (0x48): Port 4 Status 0** **Register 88 (0x58): Reserved**				
7 - 6	Reserved	N/A Don't Change.	RO	0000
5-4	Partner_Flow_Control_-Capable	These bits indicate the partner capability for both the optional MAC control sub-layer and the PAUSE function as specified in IEEE Clause 31 and Annex 31B for full duplex operation independent to rate and medium. 00 = No pause 01 = Symmetric PAUSE 10 = Asymmetric PAUSE toward link partner toward link partner 11 = Both Symmetric PAUSE and Asymmetric PAUSE toward local devices	RO	00
3	Partner 100BT Full-Duplex Capability	1 = Link partner 100BT full-duplex capable. 0 = Link partner not 100BT full-duplex capable.	RO	0
2	Partner 100BT Half-Duplex Capability	1 = Link partner 100BT half-duplex capable. 0 = Link partner not 100BT half-duplex capable.	RO	0
1	Partner 10BT Full-Duplex Capability	1 = Link partner 10BT full-duplex capable. 0 = Link partner not 10BT full-duplex capable.	RO	0
0	Partner 10BT Half-Duplex Capability	1 = Link partner 10BT half-duplex capable. 0 = Link partner not 10BT half-duplex capable.	RO	0
Register 25 (0x19): Port 1 Status 1 **Register 41 (0x29): Port 2 Status 1** **Register 57 (0x39): Port 3 Status 1** **Register 73 (0x49): Port 4 Status 1** **Register 89 (0x59): Reserved**		(Note 4-1)		
7	HP_MDIX	1 = HP Auto MDI/MDI-X Mode 0 = Microchip Auto MDI/MDI-X Mode	R/W	1
6	Factory Testing	N/A Don't Change.	RO	0
5	Polrvs	1 = Polarity is reversed 0 = Polarity is not reversed	RO	0
4	Transmit Flow Control Enable	1 = Transmit flow control feature is active 0 = Transmit flow control feature is inactive	RO	0
3	Receive Flow Control Enable	1 = Receive flow control feature is active 0 = Receive flow control feature is inactive	RO	0

© 2016-2017 Microchip Technology Inc.

TABLE 4-4: PORT REGISTERS (CONTINUED)

Address	Name	Description	Mode	Default
2	Operation Speed	1 = Link speed is 100 Mbps 0 = Link speed is 10 Mbps	RO	0
1	Operation Duplex	1 = Link duplex is full 0 = Link duplex is half	RO	0
0	Reserved	N/A Don't Change.	RO	0
Register 26 (0x1A): Port 1 PHY Control 8 **Register 42 (0x2A): Port 2 PHY Control 8** **Register 58 (0x3A): Port 3 PHY Control 8** **Register 74 (0x4A): Port 4 PHY Control 8** **Register 90 (0x5A): Reserved**		(Note 4-1)		
7	CDT 10M Short **Note:** CDT means Cable Diagnostic Test	1 = Less than 10 meter short	RO	0
6 – 5	CDT_Result	00 = Normal condition 01 = Open condition detected in cable 10 = Short condition detected in cable 11 = Cable diagnostic test has failed	RO	00
4	CDT_Enable	1 = Enable cable diagnostic test. After CDT test has completed, this bit will be self-cleared. 0 = Indicates that the cable diagnostic test (if enabled) has Indicate cable diagnostic test.	R/W (SC)	0
3	Force_Link	1 = Force link pass 0 = Normal Operation	R/W	0
2	Pwrsave	1 = Enable power saving 0 = Disable power saving	R/W	0
1	Remote Loopback	1 = Perform Remote loopback, loopback on Port 1 as follows: Port 1 (Reg. 26, Bit[1] = '1') Start : RXP1/RXM1 (Port 1) Loopback: PMD/PMA of Port 1's PHY End: TXP1/TXM1 (Port 1) Setting Reg. 42, 58, 74 Bit[1] = '1' will perform remote loopback on Ports 2, 3, 4. 0 = Normal Operation.	R/W	0
0	CDT_Fault_Count[8]	Bit[8] of CDT Fault Count Distance to the fault. It's approximately 0.4 × CDT_Fault_Count[8:0].	RO	0
Register 27 (0x1B): Port 1 LinkMD result **Register 43 (0x2B): Port 2 LinkMD result** **Register 59 (0x3B): Port 3 LinkMD result** **Register 75 (0x4B): Port 4 LinkMD result** **Register 91 (0x5B): Reserved**				
7 – 0	CDT_Fault_Count[7:0]	Bits[7:0] of CDT Fault Count Distance to the fault. It's approximately 0.4m × CDT_Fault_Count[8:0]	RO	0x00

TABLE 4-4: PORT REGISTERS (CONTINUED)

Address	Name	Description	Mode	Default
Register 28 (0x1C): Port 1 Control 9 **Register 44 (0x2C): Port 2 Control 9** **Register 60 (0x3C): Port 3 Control 9** **Register 76 (0x4C): Port 4 Control 9** **Register 92 (0x5C): Reserved**		(Note 4-1)		
7	Disable Auto-Negotiation	1 = Disable Auto-Negotiation. Speed and duplex are decided by bits [6:5] of the same register. 0 = Auto-Negotiation is on.	R/W	0
6	Forced Speed	1 = Forced 100BT if Auto-Negotiation is disabled (Bit[7]). 0 = Forced 10BT if Auto-Negotiation is disabled (Bit[7]).	R/W	1
5	Forced Duplex	1 = Forced full-duplex if (1) AN is disabled or (2) AN is enabled but failed. 0 = Forced half-duplex if (1) AN is disabled or (2) AN is enabled but failed (Default).	R/W	0
4 – 0	Reserved	N/A Don't Change.	RO	0x1f
Register 29 (0x1D): Port 1 Control 10 **Register 45 (0x2D): Port 2 Control 10** **Register 61 (0x3D): Port 3 Control 10** **Register 77 (0x4D): Port 4 Control 10** **Register 93 (0x5D): Reserved**		(Note 4-1)		
7	LED Off	1 = Turn off all port's LEDs (LEDx_2, LEDx_1, LEDx_0 Pins, where "x" is the port number). These pins will be driven high if this bit is set to one. 0 = Normal operation.	R/W	0
6	TXIDS	1 = Disable port's transmitter. 0 = Normal operation.	R/W	0
5	Restart AN	1 = Restart Auto-Negotiation. 0 = Normal operation.	R/W (SC)	0
4	Reserved	N/A Don't Change	RO	0
3	Power Down	1 = Power-down. 0 = Normal operation.	R/W	0
2	Disable Auto MDI/MDI-X	1 = Disable Auto-MDI/MDIX function. 0 = Enable Auto-MDI/MDIX function.	R/W	0
1	Forced MDI	1 = If Auto-MDI/MDIX is disabled, force PHY into MDI mode. 0 = MDI-X mode.	R/W	0
0	MAC Loopback	1 = Perform MAC loopback. Loop back path is as follows: E.g., set Port 1 MAC Loopback (Reg. 29, Bit[0] = ('1'), use Port 2 as monitor port. The packets will transfer. Start: Port 2 receiving (also can start to receive packets from Ports 3, 4, 5). Loop-back: Port 1's MAC. End: Port 2 transmitting (also can end at Port 3, 4, 5 respectively). Setting Reg. 45, 61, 77, 93, Bit[0] = '1' will perform MAC loopback on Port 2, 3, 4, 5 respectively. 0 = Normal Operation.	R/W	0

© 2016-2017 Microchip Technology Inc.

TABLE 4-4: PORT REGISTERS (CONTINUED)

Address	Name	Description	Mode	Default
Register 30 (0x1E): Port 1 Status 2 **Register 46 (0x2E): Port 2 Status 2** **Register 62 (0x3E): Port 3 Status 2** **Register 78 (0x4E): Port 4 Status 2** **Register 94 (0x5E): Reserved**		(Note 4-1)		
7	MDIX Status	1 = MDI. 0 = MDI-X.	RO	0
6	Auto-Negotiation Done	1 = Auto-Negotiation done. 0 = Auto-Negotiation not done.	RO	0
5	Link Good	1 = Link good. 0 = Link not good.	RO	0
4 – 0	Reserved	N/A Don't Change.	RO	00000
Register 31 (0x1F): Port 1 Control 11 and Status 3 **Register 47 (0x2F): Port 2 Control 11 and Status 3** **Register 63 (0x3F): Port 3 Control 11 and Status 3** **Register 79 (0x4F): Port 4 Control 11 and Status 3** **Register 95 (0x5F): Reserved**			(Note 4-1)	
7	PHY Loopback	1 = Perform PHY loopback. Loop back path is as follows: Example – Set Port 1 PHY Loopback (Reg. 31, Bit[7] = ('1') Use the Port 2 as monitor port. The packets will transfer. Start: Port 2 receiving (also can start from Port 3, 4, 5). Loopback: PMD/PMA of Port 1's PHY End: Port 2 transmitting (also can end at Ports 3, 4, 5 respectively). Setting Reg. 47, 63, 79, 95, Bit[7] = '1' will perform PHY loopback on Port 2, 3, 4, 5 respectively. 0 = Normal Operation.	R/W	0
6	Reserved	N/A Don't Change	RO	0
5	PHY Isolate	1 = Electrical isolation of PHY from the internal MII and TX+/TX–. 0 = Normal operation.	R/W	0
4	Soft Reset	1 = PHY soft reset. This bit is self-clearing. 0 = Normal operation.	R/W (SC)	0
3	Force Link	1 = Force link in the PHY. 0 = Normal operation	R/W	0
2 – 0	Port Operation Mode Indication	Indicate the current state of port operation mode: 000 = Reserved 001 = Still in Auto-Negotiation 010 = 10BASE-T half duplex 011 = 100BASE-TX half duplex 100 = Reserved 101 = 10BASE-T full duplex 110 = 100BASE-TX full duplex 111 = Reserved	RO	001

Note 4-1 Port Control 7 - 11 and Port Status 1 - 3 contents can be accessed by the MDC/MDIO interface via the standard MIIM Registers.

4.3 Advanced Control Registers

Registers 104 to 109 define the switching engine's MAC address. This 48-bit address is used as the source address in MAC pause control frames.

TABLE 4-5: ADVANCED CONTROL REGISTERS 104 - 109

Address	Name	Description	Mode	Default
Register 104 (0x68): MAC Address Register 0				
7 - 0	MACA[47:40]	—	R/W	0x00
Register 105 (0x69): MAC Address Register 1				
7 - 0	MACA[39:32]	—	R/W	0x10
Register 106 (0x6A): MAC Address Register 2				
7 - 0	MACA[31:24]	—	R/W	0xA1
Register 107 (0x6B): MAC Address Register 3				
7 - 0	MACA[23:16]	—	R/W	0xff
Register 108 (0x6C): MAC Address Register 4				
7 - 0	MACA[15:8]	—	R/W	0xff
Register 109 (0X6D): MAC Address Register 5				
7 - 0	MACA[7:0]	—	R/W	0xff

Use Registers 110 and 111 to read or write data to the static MAC address table, VLAN table, dynamic address table, PME registers, ACL tables, EEE registers and the MIB counters.

TABLE 4-6: ADVANCED CONTROL REGISTERS 110 - 111

Address	Name	Description	Mode	Default
Register 110 (0x6E): Indirect Access Control 0				
7 - 5	EEE/ACL/ PME Indirect Register Function Select	000 = Indirect mode is used for table select in bits [3:2]. While these bits are not equal 000, bits [3:2] are used for 2 additional MSB address bits. 001 = Global and Port base EEE registers are selected, port count is specified in 4 MSB indirect address bits and 8 bits register pointer is specified in 8 LSB indirect address bits. 010 = Port-base ACL registers are selected, Port count is specified in 4 MSB indirect address bits and register pointer is specified in 8 LSB indirect address bits. 011 = Reserved 100 = PME control registers are selected. 101 = Reserved	R/W	000
4	Read High Write Low	1 = Read cycle. 0 = Write cycle.	R/W	0

© 2016-2017 Microchip Technology Inc.

TABLE 4-6: ADVANCED CONTROL REGISTERS 110 - 111 (CONTINUED)

Address	Name	Description	Mode	Default
3 - 2	Table Select or Indirect Address [11:10]	If bits [6:5] = 00, then 00 = Static MAC Address Table selected. 01 = VLAN table selected. 10 = Dynamic Address Table selected. 11 = MIB Counter selected. If bits [6:5] not equal 00, then These are indirect address [11:10] that is MSB of indirect address, Bits[11:8] of the indirect address may be served as port address, and Bits[7:0] as register address. **Note 1:** The Register 110 Bits[3:0] are used for the indirect address Bits[11:8] 4 MSB bits, the four bits are used for the port indirect registers as well. 0000 = Global indirect registers 0001 = Port 1 indirect registers 0010 = Port 2 indirect registers 0011 = Port 3 indirect registers 0100 = Port 4 indirect registers 0101= Port 5 indirect registers **2:** The Register 111 Bits[7:0] are used for the indirect address bits of 8 LSB for indirect register address spacing.	R/W	00
1 - 0	Indirect Address [9:8]	Bits [9:8] of indirect address.	R/W	00
Register 111 (0x6F): Indirect Access Control 1 (Note 4-2)				
7 - 0	Indirect Address [7:0]	Bits[7:0] of indirect address.	R/W	00000000

Note 4-2 Write to Register 111 will trigger a command. Read or write access is decided by Bit[4] of Register 110.

Indirect Data Registers 112-120 are used for table of static, VLAN, dynamic table, PME, EEE, ACL and MIB counter.

TABLE 4-7: ADVANCED CONTROL REGISTERS 112 - 120

Address	Name	Description	Mode	Default
Register 112 (0x70): Indirect Data Register 8				
7 - 0	Indirect Data [71:64]	Bits[71:64] of indirect data.	R/W	00000000
Register 113 (0x71): Indirect Data Register 7				
7 - 0	Indirect Data [63:56]	Bits[63:56] of indirect data.	R/W	00000000
Register 114 (0x72): Indirect Data Register 6				
7 - 0	Indirect Data [55:48]	Bits[55:48] of indirect data.	R/W	00000000
Register 115 (0x73): Indirect Data Register 5				
7 - 0	Indirect Data [47:40]	Bits[47:40] of indirect data.	R/W	00000000
Register 116 (0x74): Indirect Data Register 4				
7 - 0	Indirect Data [39:32]	Bits[39:32] of indirect data.	R/W	00000000

TABLE 4-7: ADVANCED CONTROL REGISTERS 112 - 120 (CONTINUED)

Address	Name	Description	Mode	Default
Register 117 (0x75): Indirect Data Register 3				
7 - 0	Indirect Data [31:24]	Bits[31:24] of indirect data	R/W	00000000
Register 118 (0x76): Indirect Data Register 2				
7 - 0	Indirect Data [23:6]	Bits[23:16] of indirect data.	R/W	00000000
Register 119 (0x77): Indirect Data Register 1				
7 - 0	Indirect Data [15:8]	Bits[15:8] of indirect data.	R/W	00000000
Register 120 (0x78): Indirect Data Register 0				
7 - 0	Indirect Data [7:0]	Bits[7:0] of indirect data.	R/W	00000000

The named indirect byte registers is a direct register which is used for PME/ACL/EEE Indirect Register access only. The Indirect Byte Register 160 (0XA0) is used for read/write to all PME, EEE, and ACL indirect registers.

TABLE 4-8: ADVANCED CONTROL REGISTERS 160, 124 - 127

Address	Name	Description	Mode	Default
Register 160 (0xA0): Indirect Byte Register (for PME, EEE, and ACL Registers)				
7 - 0	Indirect Byte[7:0]	Byte data of indirect access.	R/W	00000000
Register 124 (0x7C): Interrupt Status Register				
7 - 5	Reserved	N/A Don't Change.	RO	000
4	PME Interrupt Status	1 = PME interrupt request 0 = Normal **Note:** This bit reflects PME control registers, write to PME Control Register to clear This bit is set when PME is asserted. Write a "1" to clear this bit (WC)	RO	0
3	Port 4 Interrupt Status	1 = Port 4 interrupt request 0 = Normal **Note:** This bit is set by Port 4 link change. Write a "1" to clear this bit (WC)	R/WC	0
2	Port 3 Interrupt Status	1 = Port 3 interrupt request 0 = Normal **Note:** This bit is set by a link change on Port 3. Write a "1" to clear this bit (WC)	R/WC	0
1	Port 2 Interrupt Status	1 = Port 2 interrupt request 0 = Normal **Note:** This bit is set by a link change on Port 2. Write a "1" to clear this bit (WC)	R/WC	0
0	Port 1 Interrupt Status	1 = Port 1 interrupt request 0 = Normal **Note:** This bit is set by link change on Port 1. Write a "1" to clear this bit (WC)	R/WC	0

© 2016-2017 Microchip Technology Inc.

TABLE 4-8: ADVANCED CONTROL REGISTERS 160, 124 - 127 (CONTINUED)

Address	Name	Description	Mode	Default
Register 125 (0x7D): Interrupt Mask Register				
7 - 5	Reserved	N/A Don't Change.	RO	000
4	PME Interrupt Mask	1 = Enable PME interrupt. 0 = Normal	R/W	0
3	Port 4 Interrupt Mask	1 = Enable Port 4 interrupt. 0 = Normal	R/W	0
2	Port 3 Interrupt Mask	1 = Enable Port 3 interrupt. 0 = Normal	R/W	0
1	Port 2 Interrupt Mask	1 = Enable Port 2 interrupt. 0 = Normal	R/W	0
0	Port 1 Interrupt Mask	1 = Enable Port 1 interrupt. 0 = Normal	R/W	0
Register 126 (0x7E): ACL Interrupt Status Register				
7 - 5	Reserved	N/A Don't Change.	RO	000
4 - 0	ACL_INT_ STATUS	ACL Interrupt Status, one bit per port 1 = ACL interrupt detected. 0 = No ACL interrupt detected.	RO	00000
Register 127 (0x7F): ACL Interrupt Control Register				
7 - 5	Reserved	N/A Don't Change.	RO	000
4 - 0	ACL_INT_ ENABLE	ACL Interrupt Enable, one bit per port 1 = ACL interrupt enabled. 0 = ACL interrupt disabled.	R/W	00000

Registers 128 and 129 can be used to map from 802.1p priority field 0 - 7 to the switch's four priority queues 0 - 3. 0x3 is the highest priority queues as Priority 3 and 0x0 is the lowest priority queues as Priority 0.

TABLE 4-9: ADVANCED CONTROL REGISTERS 128 - 129

Address	Name	Description	Mode	Default
Register 128 (0x80): Global Control 12				
7 - 6	Tag_0x3	IEEE 802.1p mapping. The value in this field is used as the frame's priority when its IEEE 802.1p tag has a value of 0x3.	R/W	0x1
5 - 4	Tag_0x2	IEEE 802.1p mapping. The value in this field is used as the frame's priority when its IEEE 802.1p tag has a value of 0x2.	R/W	0x1
3 - 2	Tag_0x1	IEEE 802.1p mapping. The value in this field is used as the frame's priority when its IEEE 802.1p tag has a value of 0x1.	R/W	0x0
1 - 0	Tag_0x0	IEEE 802.1p mapping. The value in this field is used as the frame's priority when its IEEE 802.1p tag has a value of 0x0.	R/W	0x0
Register 129 (0x81): Global Control 13				
7 - 6	Tag_0x7	IEEE 802.1p mapping. The value in this field is used as the frame's priority when its IEEE 802.1p tag has a value of 0x7.	R/W	0x3

TABLE 4-9: ADVANCED CONTROL REGISTERS 128 - 129 (CONTINUED)

Address	Name	Description	Mode	Default
5 - 4	Tag_0x6	IEEE 802.1p mapping. The value in this field is used as the frame's priority when its IEEE 802.1p tag has a value of 0x6.	R/W	0x3
3 - 2	Tag_0x5	IEEE 802.1p mapping. The value in this field is used as the frame's priority when its IEEE 802.1p tag has a value of 0x5.	R/W	0x2
1 - 0	Tag_0x4	IEEE 802.1p mapping. The value in this field is used as the frame's priority when its IEEE 802.1p tag has a value of 0x4.	R/W	0x2

TABLE 4-10: ADVANCED CONTROL REGISTERS 130 - 135

Address	Name	Description	Mode	Default
Register 130 (0x82): Global Control 14				
7 - 6	Pri_2Q[1:0]	When the 2 Queues configuration is selected, these Pri_2Q[1:0] bits are used to map the 2-bit result of IEEE 802.1p from Register 128/129 or TOS/DiffServ from Register 144-159 mapping (for 4 Queues) into two queues low/high priorities. 2-bit result of IEEE 802.1p or TOS/DiffServ 00 (0) = Map to Low priority queue 01 (1) = Prio_2Q[0] map to Low/High priority queue 10 (2) = Prio_2Q[1] map to Low/High priority queue 11 (3) = Map to High priority queue Pri_2Q[1:0]: 00 = Result 0,1, 2 are low priority. 3 is high priority. 01 = Not supported and should be avoided 10 = Result 0,1 are low priority. 2, 3 are high priority (default). 11 = Result 0 is low priority. 1, 2, 3 are high priority.	R/W	10
5 - 0	Reserved	N/A Don't Change.	RO	001000
Register 131 (0x83): Global Control 15				
7 - 6	Reserved	N/A Don't Change.	RO	10
5	Unknown Unicast Packet Forward	1 = Enable supporting unknown unicast packet forward 0 = Disable	R/W	0
4 - 0	Unknown Unicast Packet Forward Port Pap	00000 = Filter unknown unicast packet 00001 = Forward unknown unicast packet to Port 1 00011 = Forward unknown unicast packet to Port 1, Port 2 00111 = Forward unknown unicast packet to Port 1, Port 2, and Port 3 01111 = Forward unknown unicast packet to Port 1, Port 2, Port 3, and Port 4 11111 = Broadcast unknown unicast packet to all ports	R/W	00000
Register 132 (0x84): Global Control 16				
7 - 6	Reserved	N/A Don't Change.	RO	01

© 2016-2017 Microchip Technology Inc.

TABLE 4-10: ADVANCED CONTROL REGISTERS 130 - 135 (CONTINUED)

Address	Name	Description	Mode	Default
5	Unknown Multicast Packet Forward (not including IP multicast packet)	1 = Enable supporting unknown multicast packet forward 0 = Disable	R/W	0
4 -0	Unknown Multicast Packet Forward Port Map	00000 = Filter unknown multicast packet 00001 = Forward unknown multicast packet to Port 1 00011 = Forward unknown multicast packet to Port 1, Port 2 00111 = Forward unknown multicast packet to Port 1, Port 2 and Port 3 01111 = Forward unknown multicast packet to Port 1, Port 2, Port 3 and Port 4 11111 = Broadcast unknown multicast packet to all Ports	R/W	00000
Register 133 (0x85): Global Control 17				
7 - 6	Reserved	N/A Don't Change.	RO	00
5	Unknown VID Packet Forward	1 = Enable supporting unknown VID packet forward 0 = Disable	R/W	0
4 - 0	Unknown VID Packet Forward Port Map	00000 = Filter unknown VID packet 00001 = Forward unknown VID packet to Port 1 00011 = Forward unknown VID packet to Port 1, Port 2 00111 = Forward unknown VID packet to Port 1, Port 2 and Port 3 01111 = Forward unknown VID packet to Port 1, Port 2, Port 3 and Port 4 11111 = Broadcast unknown VID packet to all Ports	R/W	00000
Register 134 (0x86): Global Control 18				
7	Reserved	N/A Don't Change.	RO	0
6	Self-Address Filter Enable	1 = Enable filtering of self-address unicast and multicast packet 0 = Do not filter self-address packet **Note:** The self-address filtering will filter packets on the egress port, self MAC address is assigned in the Register 104 - 109.	R/W	0
5	Unknown IP Multicast Packet Forward	1 = Enable supporting unknown IP multicast packet forward 0 = Disable supporting unknown IP multicast packet forward	R/W	0

TABLE 4-10: ADVANCED CONTROL REGISTERS 130 - 135 (CONTINUED)

Address	Name	Description	Mode	Default
4 - 0	Unknown IP Multicast Packet Forward Port Map	00000 = Filter unknown IP multicast packet 00001 = Forward unknown IP multicast packet to Port 1 00011 = Forward unknown IP multicast packet to Port 1, Port 2 00111 = Forward unknown IP multicast packet to Port 1, Port 2, and Port 3 01111 = Forward unknown IP multicast packet to Port 1, Port 2, Port 3, and Port 4 11111 = Broadcast unknown IP multicast packet to all ports	R/W	00000
Register 135 (0x87): Global Control 19				
7 - 6	Reserved	N/A Don't Change.	RO	00
5 - 4	Ingress Rate Limit Period	The unit period for calculating Ingress Rate Limit: 00 = 16 ms 01 = 64 ms 1x = 256 ms	R/W	01
3	Queue-Based Egress Rate Limit Enabled	Enable Queue-Based Egress Rate Limit 0 = Port-Based Egress Rate Limit (default) 1 = Queue-Based Egress Rate Limit	R/W	0
2	Insertion Source Port PVID Tag Selection Enable	1 = Enable source port PVID tag insertion or non-insertion option on the egress Port for each source port PVID-based on the port's Control 8 Registers. 0 = Disable, all packets from any ingress port will be inserted PVID-based on Port Control 0 Register Bit[2].	R/W	0
1 - 0	Reserved	N/A Don't Change.	RO	00

The Ipv4/Ipv6 TOS priority control registers implement a fully decoded 64-bit differentiated services code point (DSCP) register used to determine priority from the 6-bit TOS field in the IP header. The most significant 6 bits of the TOS field are fully decoded into 64 possibilities, and the singular code that results is mapped to the value in the corresponding bit in the DSCP register.

TABLE 4-11: ADVANCED CONTROL REGISTERS 144 - 159

Address	Name	Description	Mode	Default
Register 144 (0x90): TOS Priority Control Register 0				
7 - 6	DSCP[7:6]	Ipv4 and Ipv6 Mapping The value in this field is used as the frame's priority when bits [7:2] of the frame's IP OS/DiffServ/Traffic Class value is 0x03.	R/W	00
5 - 4	DSCP[5:4]	Ipv4 and Ipv6 Mapping The value in this field is used as the frame's priority when bits [7:2] of the frame's IP OS/DiffServ/Traffic Class value is 0x02.	R/W	00
3 - 2	DSCP[3:2]	Ipv4 and Ipv6 Mapping The value in this field is used as the frame's priority when bits [7:2] of the frame's IP OS/DiffServ/Traffic Class value is 0x01.	R/W	00

© 2016-2017 Microchip Technology Inc.

TABLE 4-11: ADVANCED CONTROL REGISTERS 144 - 159 (CONTINUED)

Address	Name	Description	Mode	Default
1 - 0	DSCP[1:0]	Ipv4 and Ipv6 Mapping The value in this field is used as the frame's priority when bits [7:2] of the frame's IP OS/DiffServ/Traffic Class value is 0x00.	R/W	00
Register 145 (0x91): TOS Priority Control Register 1				
7 - 6	DSCP[15:14]	Ipv4 and Ipv6 mapping _ for value 0x07	R/W	00
5 - 4	DSCP[13:12]	Ipv4 and Ipv6 mapping _ for value 0x06	R/W	00
3 - 2	DSCP[11:10]	Ipv4 and Ipv6 mapping _ for value 0x05	R/W	00
1 - 0	DSCP[9:8]	Ipv4 and Ipv6 mapping _ for value 0x04	R/W	00
Register 146 (0x92): TOS Priority Control Register 2				
7 - 6	DSCP[23:22]	Ipv4 and Ipv6 mapping _ for value 0x0B	R/W	00
5 - 4	DSCP[21:20]	Ipv4 and Ipv6 mapping _ for value 0x0A	R/W	00
3 - 2	DSCP[19:18]	Ipv4 and Ipv6 mapping _ for value 0x09	R/W	00
1 - 0	DSCP[17:16]	Ipv4 and Ipv6 mapping _ for value 0x08	R/W	00
Register 147 (0x93): TOS Priority Control Register 3				
7 - 6	DSCP[31:30]	Ipv4 and Ipv6 mapping _ for value 0x0F	R/W	00
5 - 4	DSCP[29:28]	Ipv4 and Ipv6 mapping _ for value 0x0E	R/W	00
3 - 2	DSCP[27:26]	Ipv4 and Ipv6 mapping _ for value 0x0D	R/W	00
1 - 0	DSCP[25:24]	Ipv4 and Ipv6 mapping _ for value 0x0C	R/W	00
Register 148 (0x94): TOS Priority Control Register 4				
7 - 6	DSCP[39:38]	Ipv4 and Ipv6 mapping _ for value 0x13	R/W	00
5 - 4	DSCP[37:36]	Ipv4 and Ipv6 mapping _ for value 0x12	R/W	00
3 - 2	DSCP[35:34]	Ipv4 and Ipv6 mapping _ for value 0x11	R/W	00
1 - 0	DSCP[33:32]	Ipv4 and Ipv6 mapping _ for value 0x10	R/W	00
Register 149 (0x95): TOS Priority Control Register 5				
7 - 6	DSCP[47:46]	Ipv4 and Ipv6 mapping _ for value 0x17	R/W	00
5 - 4	DSCP[45:44]	Ipv4 and Ipv6 mapping _ for value 0x16	R/W	00
3 - 2	DSCP[43:42]	Ipv4 and Ipv6 mapping _ for value 0x15	R/W	00
1 - 0	DSCP[41:40]	Ipv4 and Ipv6 mapping _ for value 0x14	R/W	00
Register 150 (0x96): TOS Priority Control Register 6				
7 - 6	DSCP[55:54]	Ipv4 and Ipv6 mapping _ for value 0x1B	R/W	00
5 - 4	DSCP[53:52]	Ipv4 and Ipv6 mapping _ for value 0x1A	R/W	00
3 - 2	DSCP[51:50]	Ipv4 and Ipv6 mapping _ for value 0x19	R/W	00
1 - 0	DSCP[49:48]	Ipv4 and Ipv6 mapping _ for value 0x18	R/W	00
Register 151 (0x97): TOS Priority Control Register 7				
7 - 6	DSCP[63:62]	Ipv4 and Ipv6 mapping _ for value 0x1F	R/W	00
5 - 4	DSCP[61:60]	Ipv4 and Ipv6 mapping _ for value 0x1E	R/W	00
3 - 2	DSCP[59:58]	Ipv4 and Ipv6 mapping _ for value 0x1D	R/W	00
1 - 0	DSCP[57:56]	Ipv4 and Ipv6 mapping _ for value 0x1C	R/W	00
Register 152 (0x98): TOS Priority Control Register 8				
7 - 6	DSCP[71:70]	Ipv4 and Ipv6 mapping _ for value 0x23	R/W	00
5 - 4	DSCP[69:68]	Ipv4 and Ipv6 mapping _ for value 0x22	R/W	00
3 - 2	DSCP[67:66]	Ipv4 and Ipv6 mapping _ for value 0x21	R/W	00
1 - 0	DSCP[65:64]	Ipv4 and Ipv6 mapping _ for value 0x20	R/W	00

© 2016-2017 Microchip Technology Inc.

TABLE 4-11: ADVANCED CONTROL REGISTERS 144 - 159 (CONTINUED)

Address	Name	Description	Mode	Default
Register 153 (0x99): TOS Priority Control Register 9				
7 - 6	DSCP[79:78]	Ipv4 and Ipv6 mapping _ for value 0x27	R/W	00
5 - 4	DSCP[77:76]	Ipv4 and Ipv6 mapping _ for value 0x26	R/W	00
3 - 2	DSCP[75:74]	Ipv4 and Ipv6 mapping _ for value 0x25	R/W	00
1 - 0	DSCP[73:72]	Ipv4 and Ipv6 mapping _ for value 0x24	R/W	00
Register 154 (0x9A): TOS Priority Control Register 10				
7 - 6	DSCP[87:86]	Ipv4 and Ipv6 mapping _ for value 0x2B	R/W	00
5 - 4	DSCP[85:84]	Ipv4 and Ipv6 mapping _ for value 0x2A	R/W	00
3 - 2	DSCP[83:82]	Ipv4 and Ipv6 mapping _ for value 0x29	R/W	00
1 - 0	DSCP[81:80]	Ipv4 and Ipv6 mapping _ for value 0x28	R/W	00
Register 155 (0x9B): TOS Priority Control Register 11				
7 - 6	DSCP[95:94]	Ipv4 and Ipv6 mapping _ for value 0x2F	R/W	00
5 - 4	DSCP[93:92]	Ipv4 and Ipv6 mapping _ for value 0x2E	R/W	00
3 - 2	DSCP[91:90]	Ipv4 and Ipv6 mapping _ for value 0x2D	R/W	00
1 - 0	DSCP[89:88]	Ipv4 and Ipv6 mapping _ for value 0x2C	R/W	00
Register 156 (0x9C): TOS Priority Control Register 12				
7 - 6	DSCP [103:102]	Ipv4 and Ipv6 mapping _ for value 0x33	R/W	00
5 - 4	DSCP [101:100]	Ipv4 and Ipv6 mapping _ for value 0x32	R/W	00
3 - 2	DSCP[99:98]	Ipv4 and Ipv6 mapping _ for value 0x31	R/W	00
1 - 0	DSCP[97:96]	Ipv4 and Ipv6 mapping _ for value 0x30	R/W	00
Register 157 (0x9D): TOS Priority Control Register 13				
7 - 6	DSCP [111:110]	Ipv4 and Ipv6 mapping _ for value 0x37	R/W	00
5 - 4	DSCP [109:108]	Ipv4 and Ipv6 mapping _ for value 0x36	R/W	00
3 - 2	DSCP [107:106]	Ipv4 and Ipv6 mapping _ for value 0x35	R/W	00
1 - 0	DSCP [105:104]	Ipv4 and Ipv6 mapping _ for value 0x34	R/W	00
Register 158 (0x9E): TOS Priority Control Register 14				
7 - 6	DSCP [119:118]	Ipv4 and Ipv6 mapping _ for value 0x3B	R/W	00
5 - 4	DSCP [117:116]	Ipv4 and Ipv6 mapping _ for value 0x3A	R/W	00
3 - 2	DSCP [115:114]	Ipv4 and Ipv6 mapping _ for value 0x39	R/W	00
1 - 0	DSCP [113:112]	Ipv4 and Ipv6 mapping _ for value 0x38	R/W	00
Register 159 (0x9F): TOS Priority Control Register 15				
7 - 6	DSCP [127:126]	Ipv4 and Ipv6 mapping _ for value 0x3F	R/W	00
5 - 4	DSCP [125:124]	Ipv4 and Ipv6 mapping _ for value 0x3E	R/W	00
3 - 2	DSCP [123:122]	Ipv4 and Ipv6 mapping _ for value 0x3D	R/W	00

© 2016-2017 Microchip Technology Inc.

TABLE 4-11: ADVANCED CONTROL REGISTERS 144 - 159 (CONTINUED)

Address	Name	Description	Mode	Default
1 - 0	DSCP [121:120]	Ipv4 and Ipv6 mapping _ for value 0x3C	R/W	00

TABLE 4-12: ADVANCED CONTROL REGISTERS 163 - 164

Address	Name	Description	Mode	Default
Register 163 (0xA3): Global Control 20				
7	Reserved	N/A Don't Change.	RO	0
6 - 4	GMII/RGMI High-Speed Drive Strength	High-Speed Interfaces Drive Strength for GMII and RGMI 000 = 2 mA 001 = 4 mA 010 = 8 mA 011 = 12 mA 100 = 16 mA 101 = 20 mA 110 = 24 mA (default) 111 = 28 mA	R/W	110
3	Reserved	N/A Don't Change.	RO	0
2 - 0	MII/RMII Low-Speed Drive Strength	Low-Speed Interfaces Drive Strength for MII and RMII 000 = 2 mA 001 = 4 mA 010 = 8 mA (default) 011 = 12 mA 100 = 16 mA 101 = 20 mA 110 = 24 mA 111 = 28 mA	R/W	010
Register 164 (0xA4): Global Control 21				
7 - 4	Reserved	N/A Don't Change.	RO	0x2
3	IPv6 MLD Snooping Option	IPv6 MLD Snooping Option 1 = Enable 0 = Disable	R/W	0
2	IPv6 MLD Snooping Enable	IPv6 MLD Snooping Enable 1 = Enable 0 = Disable	R/W	0
1 - 0	Reserved	N/A Don't Change.	RO	10

TABLE 4-13: ADDITIONAL ADVANCED CONTROL REGISTERS (Note 4-1)

Address	Name	Description	Mode	Default
Register 176 (0xB0): Port 1 Control 12 **Register 192 (0xC0): Port 2 Control 12** **Register 208 (0xD0): Port 3 Control 12** **Register 224 (0xE0): Port 4 Control 12** **Register 240 (0xF0): Port 5 Control 12**				
7	Reserved	—	RO	1
6	Pass All Frames	Port-based enable to pass all frames 1 = Enable 0 = Disable **Note:** This is used in the port mirroring with RX sniff only.	R/W	0
5 -4	Reserved	—	RO	00
3	Insert Source Port PVID for Untagged Packet Destination to Highest Egress Port	Register 176: Insert source Port 1 PVID for untagged frame at egress Port 5 Register 192: Insert source Port 2 PVID for untagged frame at egress Port 5 Register 208: Insert source Port 3 PVID for untagged frame at egress Port 5 Register 224: Insert source Port 4 PVID for untagged frame at egress Port 5 Register 240: Insert source Port 5 PVID for untagged frame at egress Port 4 **Note:** Enabled by the Register 135 Bit[2].	R/W	0
2	Insert Source Port PVID for Untagged Packet Destination to Second Highest Egress Port	Register 176: Insert source Port 1 PVID for untagged frame at egress Port 4 Register 192: Insert source Port 2 PVID for untagged frame at egress Port 4 Register 208: Insert source Port 3 PVID for untagged frame at egress Port 4 Register 224: Insert source Port 4 PVID for untagged frame at egress Port 3 Register 240: Insert source Port 5 PVID for untagged frame at egress Port 3 **Note:** Enabled by the Register 135 Bit[2].	R/W	0
1	Insert Source Port PVID for Untagged Packet Destination to Second Lowest Egress Port	Register 176: Insert source Port 1 PVID for untagged frame at egress Port 3 Register 192: Insert source Port 2 PVID for untagged frame at egress Port 3 Register 208: Insert source Port 3 PVID for untagged frame at egress Port 2 Register 224: Insert source Port 4 PVID for untagged frame at egress Port 2 Register 240: Insert source Port 5 PVID for untagged frame at egress Port 2 **Note:** Enabled by the Register 135 Bit[2].	R/W	0

© 2016-2017 Microchip Technology Inc.

TABLE 4-13: ADDITIONAL ADVANCED CONTROL REGISTERS (Note 4-1) (CONTINUED)

Address	Name	Description	Mode	Default
0	Insert Source Port PVID for Untagged Packet Destination to Lowest Egress Port	Register 176: Insert source Port 1 PVID for untagged frame at egress Port 2 Register 192: Insert source Port 2 PVID for untagged frame at egress Port 1 Register 208: Insert source Port 3 PVID for untagged frame at egress Port 1 Register 224: Insert source Port 4 PVID for untagged frame at egress Port 1 Register 240: Insert source Port 5 PVID for untagged frame at egress Port 1 **Note:** Enabled by the Register 135 Bit[2].	R/W	0
Register 177 (0xB1): Port 1 Control 13 **Register 193 (0xC1): Port 2 Control 13** **Register 209 (0xD1): Port 3 Control 13** **Register 225 (0xE1): Port 4 Control 13** **Register 241 (0xF1): Port 5 Control 13**				
7 - 2	Reserved	—	RO	000000
1	4 Queue Split Enable	This bit, in combination with Register16/32/48/64/80 Bit[0], will select the split of 1, 2, and 4 queues: {Register 177 Bit[1], Register 16 Bit[0] = }: 11 = Reserved. 10 = The port output queue is split into four priority queues or if map 802.1p to priority 0-3 mode. 01 = The port output queue is split into two priority queues or if map 802.1p to priority 0-3 mode. 00 = Single output queue on the port. There is no priority differentiation even though packets are classified into high and low priority.	R/W	0
0	Enable Dropping Tag	0 = Disable tagged packets drop 1 = Enable tagged packets drop	R/W	0
Register 178 (0xB2): Port 1 Control 14 **Register 194 (0xC2): Port 2 Control 14** **Register 210 (0xD2): Port 3 Control 14** **Register 226 (0xE2): Port 4 Control 14** **Register 242 (0xF2): Port 5 Control 14**				
7	Enable Port Transmit Queue 3 Ratio	0 = Strict priority, will transmit all the packets from this priority queue 3 before transmit lower priority queue. 1 = Bits[6:0] reflect the packet number allow to transmit from this priority queue 3 within a certain time.	R/W	1
6 - 0	Port Transmit Queue 3 Ratio[6:0]	Packet number for Transmit Queue 3 for highest priority packets in four queues mode.	R/W	0001000

TABLE 4-13: ADDITIONAL ADVANCED CONTROL REGISTERS (Note 4-1) (CONTINUED)

Address	Name	Description	Mode	Default
Register 179 (0xB3): Port 1 Control 15 **Register 195 (0xC3): Port 2 Control 15** **Register 211 (0xD3): Port 3 Control 15** **Register 227 (0xE3): Port 4 Control 15** **Register 243 (0xF3): Port 5 Control 15**				
7	Enable Port Transmit Queue 2 Ratio	0 = Strict priority, will transmit all the packets from this priority queue 2 before transmit lower priority queue. 1 = Bits[6:0] reflect the packet number allow to transmit from this priority queue 1 within a certain time.	R/W	1
6 - 0	Port Transmit Queue 2 Ratio[6:0]	Packet number for Transmit Queue 2 for high/low priority packets in high/low priority packets in four queues mode.	R/W	0000100
Register 180 (0xB4): Port 1 Control 16 **Register 196 (0xC4): Port 2 Control 16** **Register 212 (0xD4): Port 3 Control 16** **Register 228 (0xE4): Port 4 Control 16** **Register 244 (0xF4): Port 5 Control 16**				
7	Enable Port Transmit Queue 1 Rate	0 = Strict priority, will transmit all the packets from this priority queue 1 before transmit lower priority queue. 1 = Bits[6:0] reflect the packet number allow to transmit from this priority queue 1 within a certain time.	R/W	1
6 - 0	Port Transmit Queue 1 Ratio[6:0]	Packet number for Transmit Queue 1 for low-/high-priority packets in four queues mode and high-priority packets in two queues mode.	R/W	0000010
Register 181 (0xB5): Port 1 Control 17 **Register 197 (0xC5): Port 2 Control 17** **Register 213 (0xD5): Port 3 Control 17** **Register 229 (0xE5): Port 4 Control 17** **Register 245 (0xF5): Port 5 Control 17**				
7	Enable Port Transmit Queue 0 Rate	0 = Strict priority, will transmit all the packets from this priority queue 0 before transmit lower priority queue. 1 = Bits[6:0] reflect the packet number allow to transmit from this priority queue 0 within a certain time.	R/W	1
6 - 0	Port Transmit Queue 0 Ratio[6:0]	Packet number for Transmit Queue 0 for lowest priority packets in four queues mode and low priority packets in two queues mode.	R/W	0000001
Register 182 (0xB6): Port 1 Rate Limit Control **Register 198 (0xC6): Port 2 Rate Limit Control** **Register 214 (0xD6): Port 3 Rate Limit Control** **Register 230 (0xE6): Port 4 Rate Limit Control** **Register 246 (0xF6): Port 5 Rate Limit Control**				
7	Reserved	—	RO	0
6	Ingress Limit Port/Priority Based Select	1 = Ingress rate limit is port based 0 = Ingress rate limit is priority based	R/W	0

© 2016-2017 Microchip Technology Inc.

TABLE 4-13: ADDITIONAL ADVANCED CONTROL REGISTERS (Note 4-1) (CONTINUED)

Address	Name	Description	Mode	Default
5	Ingress Limit Bit/Packets Mode Select	1 = Rate limit is counted based on number of packet. 0 = Rate limit is counted based on number of bit.	R/W	0
4	Ingress Rate Limit Flow Control Enable	1 = Flow Control is asserted if the port's receive rate is exceeded. 0 = Flow Control is not asserted if the port's receive rate is exceeded.	R/W	0
3 - 2	Limit Mode	Ingress Limit Mode These bits determine what type of frames are limited and counted against ingress rate limiting. 00 = Limit and count all frames. 01 = Limit and count Broadcast, Multicast, and flooded unicast frames. 10 = Limit and count Broadcast and Multicast frames only. 11 = Limit and count Broadcast frames only.	R/W	00
1	Count IFG	Count IFG Bytes 1 = Each frame's minimum inter-frame gap. (IFG) bytes (12 per frame) are included in Ingress and Egress rate limiting calculations. 0 = IFG bytes are not counted.	R/W	0
0	Count Pre	Count Preamble Bytes 1 = Each frame's preamble bytes (8 per frame) are included in Ingress and Egress rate limiting calculations. 0 = Preamble bytes are not counted.	R/W	0
Register 183 (0xB7): Port 1 Priority 0 Ingress Limit Control 1 Register 199 (0xC7): Port 2 Priority 0 Ingress Limit Control 1 Register 215 (0xD7): Port 3 Priority 0 Ingress Limit Control 1 Register 231 (0xE7): Port 4 Priority 0 Ingress Limit Control 1 Register 247 (0xF7): Port 5 Priority 0 Ingress Limit Control 1				
7	Reserved	—	RO	0
6 - 0	Port Based Priority 0 Ingress Limit	Ingress Data Rate Limit For Priority 0 Frames Ingress traffic from this port is shaped according to the Table 18 in "Rate Limiting Support" sub-section.	R/W	0000000
Register 184 (0xB8): Port 1 Priority 1 Ingress Limit Control 2 Register 200 (0xC8): Port 2 Priority 1 Ingress Limit Control 2 Register 216 (0xD8): Port 3 Priority 1 Ingress Limit Control 2 Register 232 (0xE8): Port 4 Priority 1 Ingress Limit Control 2 Register 248 (0xF8): Port 5 Priority 1 Ingress Limit Control 2				
7	Reserved	—	RO	0
6 - 0	Port-Based Priority 1 Ingress Limit	Ingress Data Rate Limit For Priority 1 Frames Ingress traffic from this port is shaped according to the Table 18 in "Rate Limiting Support" sub-section.	R/W	0000000
Register 185 (0xB9): Port 1 Priority 2 Ingress Limit Control 3 Register 201 (0xC9): Port 2 Priority 2 Ingress Limit Control 3 Register 217 (0xD9): Port 3 Priority 2 Ingress Limit Control 3 Register 233 (0xE9): Port 4 Priority 2 Ingress Limit Control 3 Register 249 (0xF9): Port 5 Priority 2 Ingress Limit Control 3				
7	Reserved	—	RO	0

TABLE 4-13: ADDITIONAL ADVANCED CONTROL REGISTERS (Note 4-1) (CONTINUED)

Address	Name	Description	Mode	Default
6 - 0	Port-Based Priority 2 Ingress Limit	Ingress Data Rate Limit For Priority 2 Frames Ingress traffic from this port is shaped according to the Table 18 in “Rate Limiting Support” sub-section.	R/W	0000000
Register 186 (0xBA): Port 1 Priority 3 Ingress Limit Control 4 **Register 202 (0xCA): Port 2 Priority 3 Ingress Limit Control 4** **Register 218 (0xDA): Port 3 Priority 3 Ingress Limit Control 4** **Register 234 (0xEA): Port 4 Priority 3 Ingress Limit Control 4** **Register 250 (0xFA): Port 5 Priority 3 Ingress Limit Control 4**				
7	Port-Based Ingress Rate Limit Enable	Ingress Data Rate Limit For Priorities Setting Valid Trigger port ingress rate limit engine to take effect for all the priority queues according to priority ingress limit control. **Note:** Any write to this register will trigger port ingress rate limit engine to take effect for all the priority queues according to priority ingress limit control. For the port priority 0 - 3 ingress rate limit control to take effect, Bit[7] of in Register 186, 202, 218, 234 and 250 for Ports 1, 2, 3, 4 and 5, respectively will need to set last after configured Bits[6:0] of Port Ingress Limit Control 1 - 4 registers.	R/W	0
6 - 0	Port-Based Priority 3 Ingress Limit	Ingress Data Rate Limit For Priority 3 Frames Ingress traffic from this port is shaped according to the Table 18 in “Rate Limiting Support” sub-section.	R/W	0000000
Register 187 (0xBB): Port 1 Queue 0 Egress Limit Control 1 **Register 203 (0xCB): Port 2 Queue 0 Egress Limit Control 1** **Register 219 (0xDB): Port 3 Queue 0 Egress Limit Control 1** **Register 235 (0xEB): Port 4 Queue 0 Egress Limit Control 1** **Register 251 (0xFB): Port 5 Queue 0 Egress Limit Control 1**				
7	Reserved	—	RO	0
6 - 0	Port Queue 0 Egress Limit	Egress Data Rate Limit For Priority 0 Frames Egress traffic from this port is shaped according to the Table 18 in “Rate Limiting Support” sub-section. In four queues mode, it is lowest priority. In two queues mode, it is low priority.	R/W	0000000
Register 188 (0xBC): Port 1 Queue 1 Egress Limit Control 2 **Register 204 (0xCC): Port 2 Queue 1 Egress Limit Control 2** **Register 220 (0xDC): Port 3 Queue 1 Egress Limit Control 2** **Register 236 (0xEC): Port 4 Queue 1 Egress Limit Control 2** **Register 252 (0xFC): Port 5 Queue 1 Egress Limit Control 2**				
7	Reserved	—	RO	0
6 - 0	Port Queue 1 Egress Limit	Egress Data Rate Limit For Priority 1 Frames Egress traffic from this port is shaped according to the Table 18 in “Rate Limiting Support” sub-section. In four queues mode, it is low/high priority. In two queues mode, it is high priority.	R/W	0000000
Register 189 (0xBD): Port 1 Queue 2 Egress Limit Control 3 **Register 205 (0xCD): Port 2 Queue 2 Egress Limit Control 3** **Register 221 (0xDD): Port 3 Queue 2 Egress Limit Control 3** **Register 237 (0xED): Port 4 Queue 2 Egress Limit Control 3** **Register 253 (0xFD): Port 5 Queue 2 Egress Limit Control 3**				

© 2016-2017 Microchip Technology Inc.

TABLE 4-13: ADDITIONAL ADVANCED CONTROL REGISTERS (Note 4-1) (CONTINUED)

Address	Name	Description	Mode	Default
7	Reserved	—	RO	0
6 - 0	Port Queue 2 Egress Limit	Egress Data Rate Limit For Priority 2 Frames Egress traffic from this port is shaped according to the Table 18 in “Rate Limiting Support” sub-section. In four queues mode, it is high/low priority.	R/W	0000000
Register 190 (0xBE): Port 1 Queue 3 Egress Limit Control 4 **Register 206 (0xCE): Port 2 Queue 3 Egress Limit Control 4** **Register 222 (0xDE): Port 3 Queue 3 Egress Limit Control 4** **Register 238 (0xEE): Port 4 Queue 3 Egress Limit Control 4** **Register 254 (0xFE): Port 5 Queue 3 Egress Limit Control 4**				
7	Reserved	—	RO	0
6 - 0	Port Queue 3 Egress Limit	Egress Data Rate Limit For Priority 3 Frames Egress traffic from this port is shaped according to the Table 18 in “Rate Limiting Support” sub-section. In four queues mode, it is highest priority.	R/W	0000000

Note 4-1 In the port priority 0 - 3 ingress rate limit mode, it is necessary to set all related egress ports to two queues or four queues mode.
In the port queue 0 - 3 egress rate limit mode, the highest priority get exact rate limit based on the rate select table, other priorities packets rate are based upon the ratio of the Port Control 14/15/16/17 Registers when using more than one egress queue per port.

TABLE 4-14: ADVANCED CONTROL REGISTERS 191 - 255

Address	Name	Description	Mode	Default
Register 191 (0xBF): Testing Register				
7 - 0	Reserved	N/A Don’t Change.	RO	0x80
Register 207 (0xCF): Reserved Control Register				
7 - 0	Reserved	N/A Don’t Change.	RO	0x15
Register 223 (0xDF): Test Register 2				
7 - 0	Reserved	N/A Don’t Change.	RO	0x0C
Register 239 (0xEF): Test Register 3				
7 - 0	Reserved	N/A Don’t Change.	RO	0x32
Register 255 (0xFF): Testing Register 4				
7 - 0	Reserved	N/A Don’t Change.	RO	0x00

TABLE 4-15: INDIRECT REGISTER DESCRIPTIONS

Control	Indirect Address	Contents
Direct Address 0x6E, Function Select Bits[7-5] = 000, Table_select Bits[3-2] = 00	0x000 – 0x01F	Static MAC address table entry 0 – 31
Direct Address 0x6E, Function Select Bits[7-5] = 000, Table_select Bits[3-2] = 01	0x000 – 0x1FF	VLAN table bucket 0 – 1023 (4 entries per bucket)
Direct Address 0x6E, Function Select Bits[7-5] = 000, Table_select Bits[3-2] = 10	0x000 – 0x1FF	Dynamic MAC address table entry 0 – 1023

TABLE 4-15: INDIRECT REGISTER DESCRIPTIONS (CONTINUED)

Control	Indirect Address	Contents
Direct Address 0x6E, Function Select Bits[7-5] = 000, Table_select Bits[3-2] = 11	0x000 – 0x08F, 0x100 – 0x109	0x000 – 0x01F Port 1 MIB Counters 0x020 – 0x03F Port 2 MIB Counters 0x040 – 0x05F Port 3 MIB Counters 0x060 – 0x07F Port 4 MIB Counters 0x080 – 0x09F Port 5 MIB Counters 0x100 – 0x113 Total Byte and Dropped MIB Counter
Direct Address 0x6E, Function Select Bits[7-5] = 001, Bits[3-0] = Indirect Address Bits[11-8] = MSB Indirect Address = Port indirect register address 0xn	{0xn, 6h00} – {0xn, 6h05}	Port-based 16-bit EEE Control Registers 0 – 5 n – Port number Use Indirect Byte Register (0xA0)
Direct Address 0x6E, Function Select Bits[7-5] = 010, Bits[3-0] = Indirect Address Bits[11-8] = MSB Indirect Address = Port indirect register address 0xn	{0xn, 6h00} – {0xn, 6h1F}	ACL entry 0 – 15, 6h00 and 6h01 for entry 0, etc. n = Port number Use Indirect Byte Register(0xA0)
Direct Address 0x6E, Function Select Bits[7-5] = 011, Bits[3-0] = Indirect Address Bits [11-8] = MSB Indirect Address = Port indirect register address 0xn	{0xn, 8h00} – {0xn, 8h4FF}	Reserved for the factory.
Direct Address 0x6E, Function Select Bits[7-5] = 100, Bits[3-0] = Indirect Address Bits[11-8] = MSB Indirect Address = Port indirect register address 0xn	{0xn, 8h00} – {0xn, 8h4FF}	Configuration Registers, PME, etc. n = 0 - Global n = 1 – 4 Port number Use Indirect Byte Register(0xA0)
Direct Address 0x6E, Function Select Bits[7-5] = 101, Bits[3-0] = Indirect Address Bits [11-8] = MSB Indirect Address = Port indirect register address 0xn	{0xn, 8h00} – {0xn, 8h4FF}	Reserved for the factory.

4.4 Static MAC Address Table

The KSZ8795CLX incorporates a static and a dynamic address table. When a DA look-up is requested, both tables will be searched to make a packet forwarding decision. When an SA look-up is requested, only the dynamic table is searched for aging, migration, and learning purposes. The static DA look-up result will have precedence over the dynamic DA look-up result. If there are DA matches in both tables, the result from the static table will be used. The static table can only be accessed and controlled by an external SPI master (usually a processor). The entries in the static table will not be aged out by KSZ8795CLX. An external device does all addition, modification and deletion.

Note: Register bit assignments are different for static MAC table reads and static MAC table write, as shown in the following table.

TABLE 4-16: STATIC MAC ADDRESS TABLE

Address	Name	Description	Mode	Default
Format of Static MAC Table for Reads (32 entries)				
63 - 57	FID	Filter VLAN ID, representing one of the 128 active VLANs.	RO	0000000
56	Use FID	1 = Use (FID+MAC) to look-up in static table. 0 = Use MAC only to look-up in static table.	RO	0
55	Reserved	—	RO	0

© 2016-2017 Microchip Technology Inc.

TABLE 4-16: STATIC MAC ADDRESS TABLE (CONTINUED)

Address	Name	Description	Mode	Default
54	Override	1 = Override spanning tree “transmit enable = 0” or “receive enable = 0* setting. This bit is used for spanning tree implementation. 0 = No override.	RO	0
53	Valid	1 = This entry is valid, the look-up result will be used. 0 = This entry is not valid.	RO	0
52 - 48	Forwarding Ports	These 5 bits control the forward ports. For example: 00001 = Forward to Port 1 00010 = Forward to Port 2 00100 = Forward to Port 3 01000 = Forward to Port 4 10000 = Forward to Port 5 00110 = Forward to Port 2 and Port 3 11111 = Broadcasting (excluding the ingress port)	RO	00000
47 - 0	MAC Address (DA)	48-bit MAC address.	RO	0x0
Format of Static MAC Table for Writes (32 entries)				
62 - 56	FID	Filter VLAN ID, representing one of the 128 active VLANs.	W	0000000
55	Use FID	1 = Use (FID+MAC) to look-up in static table. 0 = Use MAC only to look-up in static table.	W	0
54	Override	1 = Override spanning tree “transmit enable = 0” or “receive enable = 0” setting. This bit is used for spanning tree implementation. 0 = No override.	W	0
53	Valid	1 = This entry is valid, the look-up result will be used. 0 = This entry is not valid.	W	0
52 - 48	Forwarding Ports	These 5 bits control the forward ports. For example, 00001 = Forward to Port 1 00010 = Forward to Port 2 00100 = Forward to Port 3 01000 = Forward to Port 4 10000 = Forward to Port 5 00110 = Forward to Port 2 and Port 3 11111 = Broadcasting (excluding the ingress port)	W	00000
47 - 0	MAC Address (DA)	48-bit MAC address.	W	0

Examples:

1. Static Address Table Read (read the 2nd entry)

   Write to Register 110 with 0x10 (read static table selected)

   Write to Register 111 with 0x1 (trigger the read operation)

Then

Read Register 113 (63:56)

Read Register 114 (55:48)

Read Register 115 (47:40)

Read Register 116 (39:32)

Read Register 117 (31:24)

Read Register 118 (23:16)

Read Register 119 (15:8)

Read Register 120 (7:0)

2. Static Address Table Write (write the 8th entry)

Write Register 113 (62:56)

Write Register 114 (55:48)

Write Register 115 (47:40)

Write Register 116 (39:32)

Write Register 117 (31:24)

Write Register 118 (23:16)

Write Register 119 (15:8)

Write Register 120 (7:0)

Write to Register 110 with 0x00 (write static table selected)

Write to Register 111 with 0x7 (trigger the write operation)

4.5 VLAN Table

The VLAN table is used for VLAN table look-up. If 802.1q VLAN mode is enabled (Register 5 Bit[7] = 1), this table is used to retrieve VLAN information that is associated with the ingress packet. There are three fields for FID (filter ID), Valid, and VLAN membership in the VLAN table. The three fields must be initialized before the table is used. There is no VID field because 4096 VIDs are used as a dedicated memory address index into a 1024x52-bit memory space. Each entry has four VLANs. Each VLAN has 13 bits. Four VLANs need 52 bits. There are a total of 1024 entries to support a total of 4096 VLAN IDs by using dedicated memory address and data bits. FID has 7 bits to support 128 active VLANs.

TABLE 4-17: VLAN TABLE

Address	Name	Description	Mode	Initial Suggested Value
Format of Static VLAN Table (Support Max 4096 VLAN ID entries and 128 Active VLANs)				
12	Valid	1 = The entry is valid. 0 = Entry is invalid.	R/W	0
11 - 7	Membership	Specifies which ports are members of the VLAN. If a DA look-up fails (no match in both static and dynamic tables), the packet associated with this VLAN will be forwarded to ports specified in this field. E.g., 11001 means Ports 5, 4, and 1 are in this VLAN.	R/W	111111
6 - 0	FID	Filter ID. The KSZ8795CLX supports 128 active VLANs represented by these seven bit fields. FID is the mapped ID. If 802.1q VLAN is enabled, the look-up will be based on FID+DA and FID+SA.	R/w	0

If 802.1q VLAN mode is enabled, the KSZ8795CLX assigns a VID to every ingress packet when the packet is untagged or tagged with a null VID, the packet is assigned with the default Port VID of the ingress port. If the packet is tagged with non-null VID, the VID in the tag is used. The look-up process starts from the VLAN table look-up based on VID number with its dedicated memory address and data bits. If the entry is not valid in the VLAN table, the packet is dropped and no address learning occurs. If the entry is valid, the FID is retrieved. The FID+DA and FID+SA lookups in MAC tables are performed. The FID+DA look-up determines the forwarding ports. If FID+DA fails for look-up in the MAC table, the packet is broadcast to all the members or specified members (excluding the ingress port) based on the VLAN table. If FID+SA fails, the FID+SA is learned. To communicate between different active VLANs, set the same FID; otherwise set a different FID.

© 2016-2017 Microchip Technology Inc.

The VLAN table configuration is organized as 1024 VLAN sets, each VLAN set consists of four VLAN entries, to support up to 4096 VLAN entries. Each VLAN set has total 60 bits and three reversed bits are inserted between entries. Actually, 52 bits are used for the VLAN set which should be read or written at the same time specified by the indirect address.

The VLAN entries in the VLAN set are mapped to indirect data registers as follow:

- Entry0[12:0] maps to the VLAN set Bits[12:0] {Register 119[4:0], Register 120[7:0]}
- Entry1[12:0] maps to the VLAN set Bits[28:16] {Register 117[4:0], Register 118[7:0]}
- Entry2[12:0] maps to the VLAN set Bits[44:32] {Register 115[4:0], Register 116[7:0]}
- Entry3[12:0] maps to the VLAN set Bits[60:48] {Register 113[4:0], Register 114[7:0]}

In order to read one VLAN entry, the VLAN set is read first and the specific VLAN entry information can be extracted. To update any VLAN entry, the VLAN set is read first then only the desired VLAN entry is updated and the whole VLAN set is written back. The FID in the VLAN table is 7 bits, so the VLAN table supports unique 128 flow VLAN groups. Each VLAN set address is 10 bits long (Maximum is 1024) in the Indirect Address Register 110 and 111, the Bits[9:8] of VLAN set address is at Bits[1:0] of Register 110, and the Bits[7:0] of VLAN set address is at bits [7:0] of Register 111. Each Write and Read can access up to four consecutive VLAN entries.

Examples:

1. VLAN Table Read (read the VID = 2 entry)

   Write the indirect control and address registers first

   Write to Register 110 (0x6E) with 0x14 (read VLAN table selected)

   Write to Register 111 (0x6F) with 0x0 (trigger the read operation for VID = 0, 1, 2, 3 entries)

Then read the Indirect Data Registers Bits[38:26] for VID = 2 entry

   Read Register 115 (0x73), (Register 115 [4:0] are Bits[12:8] of VLAN VID = 2 entry)

   Read Register 116 (0x74), (Register 116 [7:0] are Bits[7:0] of VLAN VID = 2 entry)

2. VLAN Table Write (write the VID = 10 entry)

   Read the VLAN set that contains VID = 8, 9, 10, 11.

   Write to Register 110 (0x6E) with 0x14 (read VLAN table selected)

   Write to Register 111 (0x6F) with 0x02 (trigger the read operation and VID = 8, 9, 10, 11 indirect address)

   Read the VLAN set first by the Indirect Data Registers 113, 114, 115, 116, 117, 118, 119, 120.

Modify the Indirect Data Registers Bits[44:32] by the Register 115 Bit[4:0] and Register 116 Bits[7:0] as follows:

   Write to Register 115 (0x73), (Register115 [4:0] are Bits[12:8} of VLAN VID = 10 entry)

   Write to Register 116 (0x74), (Register116 [7:0] are Bits[7:0] of VLAN VID = 10 entry)

Then write the indirect control and address registers

   Write to Register 110 (0x6E) with 0x04 (write VLAN table selected)

   Write to Register 111 (0x6F) with 0x02 (trigger the write operation and VID = 8, 9, 10, 11 indirect address)

Table 4-18 shows the relationship of the indirect address/data registers and VLAN ID.

TABLE 4-18: VLAN ID AND INDIRECT REGISTERS

Indirect Address High/Low Bit[9-0] for VLAN Sets	Indirect Data Registers Bits for Each VLAN Entry	VID Numbers	VID Bit[12-2] in VLAN Tag	VID Bit[1-0] in VLAN Tag
0	Bits[12:0]	0	0	0
0	Bits[28:16]	1	0	1
0	Bits[44:32]	2	0	2
0	Bits[60:48]	3	0	3
1	Bits[12:0]	4	1	0
1	Bits[28:16]	5	1	1
1	Bits[44:32]	6	1	2
1	Bits[60:48]	7	1	3
2	Bits[12:0]	8	2	0

TABLE 4-18: VLAN ID AND INDIRECT REGISTERS (CONTINUED)

Indirect Address High/Low Bit[9-0] for VLAN Sets	Indirect Data Registers Bits for Each VLAN Entry	VID Numbers	VID Bit[12-2] in VLAN Tag	VID Bit[1-0] in VLAN Tag
2	Bits[28:16]	9	2	1
2	Bits[44:32]	10	2	2
2	Bits[60:48]	11	2	3
:	:	:	:	:
:	:	:	:	:
:	:	:	:	:
1023	Bits[12:0]	4092	1023	0
1023	Bits[28:16]	4093	1023	1
1023	Bits[44:32]	4095	1023	2
1023	Bits[60:48]	4095	1023	3

4.6 Dynamic MAC Address Table

Table 4-19 is read-only.

TABLE 4-19: DYNAMIC MAC ADDRESS TABLE

Address	Name	Description	Mode	Default
Format of Dynamic MAC Address Table (1K entries)				
71	MAC Empty	1 = There is no valid entry in the table. 0 = There are valid entries in the table.	RO	1
70 - 61	No. of Valid Entries	Indicates how many valid entries in the table. 0x3ff means 1K entries 0x1 and Bit[71] = 0: means 2 entries 0x0 and Bit[71]= 0: means 1 entry 0x0 and Bit[71] = 1: means 0 entry	RO	0
60 - 59	Time Stamp	2-bit counters for internal aging	RO	—
58 - 56	Source Port	The source port where FID+MAC is learned. 000 = Port 1 001 = Port 2 010 = Port 3 011 = Port 4 100 = Port 5	RO	0x0
55	Data Ready	1 = The entry is not ready, retry until this bit is set to 0. 0 = The entry is ready.	RO	—
54 - 48	FID	Filter ID	RO	0x0
47 - 0	MAC Address	48-bit MAC address	RO	0x0

Examples:

1. Dynamic MAC Address Table Read (read the 1st entry), and retrieve the MAC table size

   Write to Register 110 with 0x18 (read dynamic table selected)

   Write to Register 111 with 0x0 (trigger the read operation) and then

   Read Register 112 (71:64)

   Read Register 113 (63:56); // the above two registers show # of entries

   Read Register 114 (55:48) // if Bit[55] is 1, restart (reread) from this register

© 2016-2017 Microchip Technology Inc.

Read Register 115 (47:40)

Read Register 116 (39:32)

Read Register 117 (31:24)

Read Register 118 (23:16)

Read Register 119 (15:8)

Read Register 120 (7:0)

2. Dynamic MAC Address Table Read (read the 257th entry), without retrieving number of entries information

   Write to Register 110 with 0x19 (read dynamic table selected)

   Write to Register 111 with 0x1 (trigger the read operation) and then

   Read Register 112 (71:64)

   Read Register 113 (63:56)

   Read Register 114 (55:48) // if Bit[55] is 1, restart (reread) from this register

   Read Register 115 (47:40)

   Read Register 116 (39:32)

   Read Register 117 (31:24)

   Read Register 118 (23:16)

   Read Register 119 (15:8)

   Read Register 120 (7:0)

4.7 PME Indirect Registers

The PME registers are provided on a global and per-port basis. These registers are read/write using indirect memory access, as shown in Table 4-20.

TABLE 4-20: PME INDIRECT REGISTERS

Address	Name	Description	Mode	Default
Global PME Control Register **Reg. 110 (0x6E) Bits[7:5] =100 for PME, Reg.110 Bits[3:0] = 0x0 for the indirect global register,** **Reg. 111 (0x6F) Bits[7:0] = Offset to access the Indirect Byte Register 0xA0.** **Offset: 0x00 (Bits[31:24]), 0x01 (Bits[23:16]), 0x02 (Bit[15:8]), 0x03 (Bits[7:0]).** **Location: (100 PME) -> {0x0, offset} -> 0xA0 holds the data.**				
31 - 2	Reserved	—	RO	All ‘0’
1	PME Output Enable	1= PME output pin is enabled. 0= PME output pin is disabled.	R/W	0
0	PME Output Polarity	1= PME output pin is active-high. 0= PME output pin is active-low.	R/W	0
Port PME Control Status Register Reg. 110 (0x6E) Bits[7:5] =100 for PME, Reg. 110 Bits[3:0] = 0xn for the Indirect Port Register (n = 1,2,3,4). Reg. 111 (0x6F) Bits[7:0] = Offset to access the Indirect Byte Register 0xA0. Offset: 0x00 (Bits[31:24]), 0x01 (bits [23:16]), 0x02 (Bits[5:8]), 0x03 (Bits[7:0]). Location: (100 PME) -> {0xn, offset} -> 0xA0 holds the data.				
31 - 3	Reserved	—	RO	All ‘0’
2	Magic Packet Detect	1 = Magic packet is detected at any port (write 1 to clear). 0 = No magic packet is detected.	R/W W1C	0
1	Link-Up Detect	1 = Link up is detected at any port (write 1 to clear). 0 = No link-up is detected.	R/W W1C	0
0	Energy Detect	1 = Energy is detected at any port (write 1 to clear). 0 = No energy is detected.	R/W W1C	0

TABLE 4-20: PME INDIRECT REGISTERS (CONTINUED)

Address	Name	Description	Mode	Default
Port PME Control Mask Register **Reg. 110 (0x6E) Bits[7:5]=100 for PME, Reg. 110 Bits[3:0] = 0xn for port (n = 1, 2, 3, 4).** **Reg. 111 (0x6F) Bits[7:0]= Offset to access the Indirect Byte Register 0xA0.** **Offset: 0x04 (Bits[31:24]), 0x05 (Bits[23:16]), 0x06 (Bits[15:8]), 0x07 (Bits[7:0]).** **Location: (100 PME) -> {0xn, offset} -> 0xA0 holds the data.**				
31 - 3	Reserved	—	RO	All ‘0’
2	Magic Packet Detect Enable	1 = The PME pin will be asserted when a magic packet is detected at host QMU. 0 = The PME pin will not be asserted by the magic packet detection.	R/W	0
1	Link-Up Detect Enable	1 = The PME pin will be asserted when a link-up is detected at any port. 0 = The PME pin will not be asserted by the link-up detection.	R/W	0
0	Energy Detect Enable	1 = The PME pin will be asserted when energy on line is detected at any port. 0 = The PME pin will not be asserted by the energy detection.	R/W	0

Programming Examples

Read Operation

1. Use the Indirect Access Control Register to select register to be read, to read Global PME Control Register.

   Write 0x90 to the Register 110 (0x6E) // PME selected and read operation, and 4 MSBs of port number (Register 110 Bits[3:0]) = 0 for the Global PME Register.
2. Write 0x03 to the Register 111 (0x6F) // trigger the read operation for bits [7:0] of the Global PME Control Register.
3. Read the Indirect Byte Register 160 (0xA0) // Get the value of the Global PME Control Register.

Write Operation

1. Write 0x80 to the Register 110 (0x6E) //PME selected and write operation, and 4 MSBs of Port number = 0 for the Global PME Register.
2. Write 0x03 to the Register 111 (0x6F) // select write the bits [7:0] of the Global PME Control Address Register.
3. Write new value to the Indirect Byte Register 160 bits [7:0] (0xA0) //Write value to the Global PME Control Register of the Indirect PME Data Register by the assigned the indirect data register address.

© 2016-2017 Microchip Technology Inc.

4.8 ACL Rule Table and ACL Indirect Registers

4.8.1 ACL REGISTER AND PROGRAMMING MODEL

The ACL registers are accessible by the microcontroller through a serial interface. The per-port register set is accessed through indirect addressing mechanism. The ACL entries are stored in the format shown in the following figure. Each ACL rule list table can input up to 16 entries per port, with a total of five ACL rule list tables that can be set for five ports.

FIGURE 4-2: ACL TABLE ACCESS

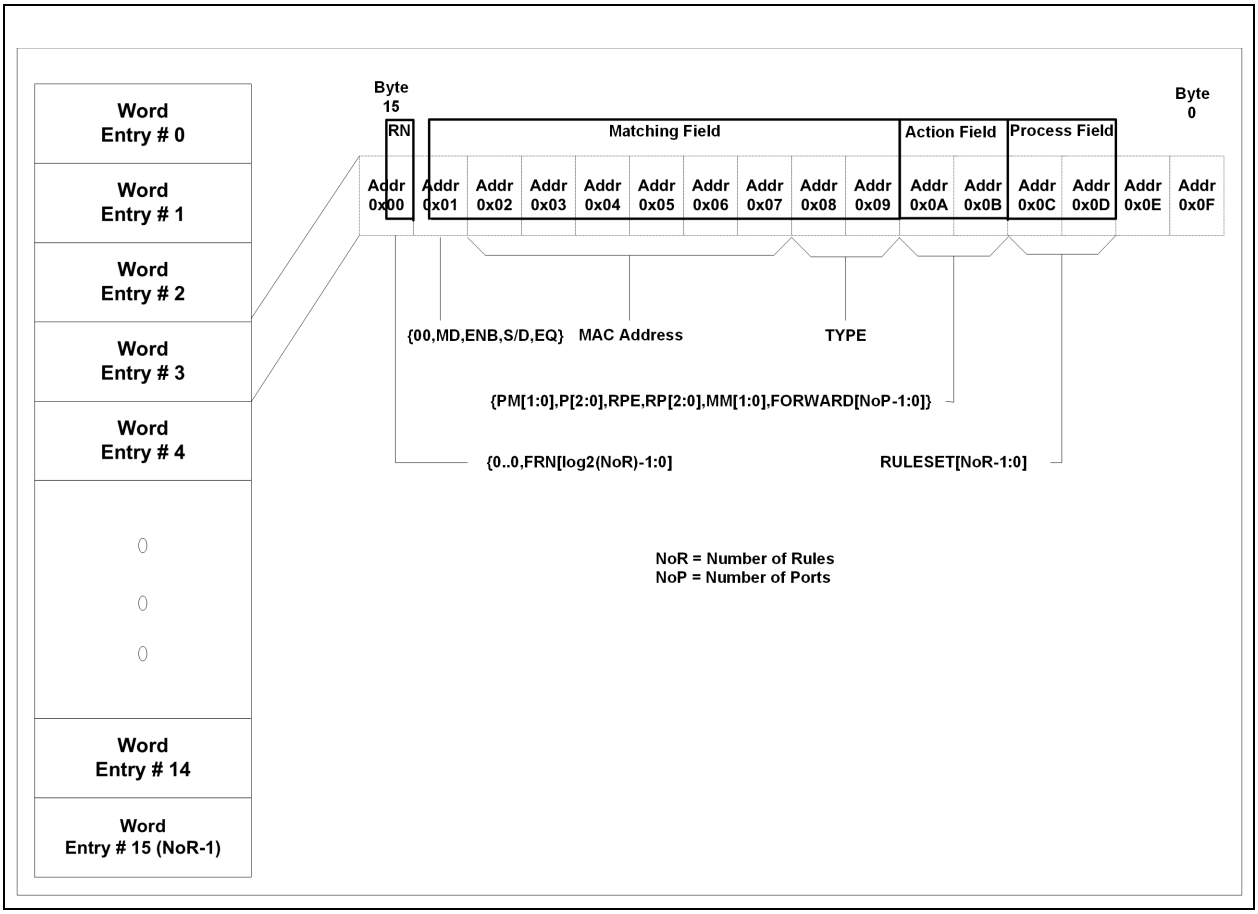

To update any port-based ACL registers, it is suggested to execute a read modify write sequence for each 128-bit (112 are used) entry addressed by the Indirect Address Register to ensure the integrity of control content. Minimum two indirect control writes and two indirect control reads are needed for each ACL entry read access (indirect data read shall follow), and minimum one indirect control read and three indirect control writes are required for each ACL entry write access. Each 112-bit port-based ACL word entry (ACL Word) is accomplished through a sequence of the Indirect Access Control 0 Registers 110 (0x6E) accesses by specifying the Bits[3:0] 4-bit port number (Indirect address [11:8]) and 8-bit indirect register address (indirect address[7:0]) in the Indirect Access Control 1 Register 111 (0x6F). The address numbers 0x00-0x0d are used to specify the byte location of each entry (see above figure), address 0x00 indicates the byte 15 (MSB) of each 128-bit entry, address 0x01 indicates the byte 14 etc., bytes at address 0x0E and 0x0F are reserved for the future. Address 0x10 and 0x11 hold bit-wise Byte Enable for each entry. Address 0x12 is used as control and status register. The format of these registers is defined in the ACL Indirect Registers sub-section.

4.8.2 ACL INDIRECT REGISTERS

Table 4-21 is used to implement ACL mode selection and filtering on a per-port basis.

TABLE 4-21: ACL INDIRECT REGISTERS FOR 14 BYTE ACL RULES

Address	Name	Description	Mode	Default
Port_ACL_0 **ACL Port Register 0 (0x00)** **Reg. 110 (0x6E) Bits[7:5] = 010 for ACL, Reg. 110 Bits[3:0] = 0xn for Ports 1, 2, 3, 4, and 5.** **Reg. 111 (0x6F) Bits[7:0] = Offset 0x00 to access the Indirect Byte Register 0xA0.** **Location: (010 ACL) -> {0xn, offset} -> 0xA0 holds the data.** **Processing Field**				
7 - 4	Reserved	—	RO	0x0
3 - 0	FRN[3:0]	First Rule Number This is for the first rule number of the rule set. There are total 16 entries per port in ACL rule table. Each single rule can be set with other rule for a rule set by the ACL port Register 12 (0x0c) and Register 13 (0x0d). Regardless single rule or rule set, have to assign an entry for using which Action Field by FRN[3:0].	R/W	0000
Port_ACL_1 **ACL Port Register 1 (0x01)** **Reg. 110 (0x6E) Bits[7:5] = 010 for ACL, Reg. 110 Bits[3:0] = 0xn for Ports 1, 2, 3, 4, and 5.** **Reg. 111 (0x6F) Bits[7:0] = Offset 0x01 to access the Indirect Byte Register 0xA0.** **Location: (010 ACL) -> {0xn, offset} -> 0xA0 holds the data.** **Matching Fields**				
7 - 6	Reserved	—	RO	00
5 - 4	MD[1:0]	MODE 00 = Disable the current rule list, no action taken 01 = Qualify rules for Layer 2 MAC header filtering 10 = Is used for Layer 3 IP address filtering 11 = Performs Layer 4 TCP port number/protocol filtering	R/W	00

© 2016-2017 Microchip Technology Inc.

TABLE 4-21: ACL INDIRECT REGISTERS FOR 14 BYTE ACL RULES (CONTINUED)

Address	Name	Description	Mode	Default
3 - 2	ENB[1:0]	ENABLE When MD=01: 00 = The 11 bits from PM, P, REP, MM in action field specify a count value for packets matching MAC Address and TYPE in matching field. The count unit is defined in FORWARD field Bit[4]; Bit[4] = 0, µs will be used. Bit[4] = 1, ms will apply. The FORWARDED field Bit[3] determines the algorithm used to generate interrupt when counter terminated. Bit[3] = 0, an 11-bit counter will be loaded with the count value from the list and start counting down every unit time. An interrupt will be generated when expires, i.e., next qualified packet has not been received within the period specified by the value. Bit[3] = 1, the counter is incremented every matched packet received and the interrupt is generated while terminal count reached, the count resets thereafter. 01 = MAC address bit field is participating in test. 10 = MAC TYPE bit field is used for test. 11 = Both MAC address and TYPE are tested against these bit fields in the list. When MD=10: 00 = Reserved. 01 = IP address and mask or IP protocol is enabled to be tested accordingly. 10 = SA and DA are compared; the drop/forward decision is based on the E/Q bit setting. 11 = Reserved When MD=11: 00 = Protocol comparison is enabled. 01 = TCP/UDP address comparison is selected. 10 = It is same with ‘01’ 11 = The sequence number of TCP is compared.	R/W	00
1	S_D	Source/Destination Address 0 = DA is used to compare. 1 = SA is used to compare	R/W	0
0	EQ	Compare Equal 0 = Match if they are not equal. 1 = Match if they are equal.	R/W	0
Port_ACL_2 **ACL Port Register 2 (0x02)** **Reg. 110 (0x6E) Bits[7:5] = 010 for ACL, Reg. 110 Bits[3:0] = 0xn for Ports 1, 2, 3, 4, and 5.** **Reg. 111 (0x6F) Bits[7:0] = Offset 0x02 to access the Indirect Byte Register 0xA0.** **Location: (010 ACL) -> {0xn, offset} -> 0xA0 holds the data.** **Matching Fields for Layer 2**				
7 - 0	MAC_ADDR [47:40]	MAC Address	R/W	00000000

TABLE 4-21: ACL INDIRECT REGISTERS FOR 14 BYTE ACL RULES (CONTINUED)

Address	Name	Description	Mode	Default
Port_ACL_3 **ACL Port Register 3 (0x03)** **Reg. 110 (0x6E) Bits[7:5] = 010 for ACL, Reg. 110 Bits[3:0] = 0xn for Ports 1, 2, 3, 4, and 5.** **Reg. 111 (0x6F) Bits[7:0] = Offset 0x03 to access the Indirect Byte Register 0xA0.** **Location: (010 ACL) -> {0xn, offset} -> 0xA0 holds the data.** **Matching Fields for Layer 2**				
7 - 0	MAC_ADDR [39:32]	MAC Address	R/W	00000000
Port_ACL_4 **ACL Port Register 4 (0x04)** **Reg. 110 (0x6E) Bits[7:5] = 010 for ACL, Reg. 110 Bits[3:0] = 0xn for Ports 1, 2, 3, 4, and 5.** **Reg. 111 (0x6F) Bits[7:0] = Offset 0x04 to access the Indirect Byte Register 0xA0.** **Location: (010 ACL) -> {0xn, offset} -> 0xA0 holds the data.** **Matching Fields for Layer 2**				
7 - 0	MAC_ADDR [31:24]	MAC Address	R/W	00000000
Port_ACL_5 **ACL Port Register 5 (0x05)** **Reg. 110 (0x6E) Bits[7:5] = 010 for ACL, Reg. 110 Bits[3:0] = 0xn for Ports 1, 2, 3, 4, and 5.** **Reg. 111 (0x6F) Bits[7:0] = Offset 0x05 to access the Indirect Byte Register 0xA0.** **Location: (010 ACL) -> {0xn, offset} -> 0xA0 holds the data.** **Matching Fields for Layer 2**				
7 - 0	MAC_ADDR [23:16]	MAC Address	R/W	00000000
Port_ACL_6 **ACL Port Register 6 (0x06)** **Reg. 110 (0x6E) Bits[7:5] = 010 for ACL, Reg. 110 Bits[3:0] = 0xn for Ports 1, 2, 3, 4, and 5.** **Reg. 111 (0x6F) Bits[7:0] = Offset 0x06 to access the Indirect Byte Register 0xA0.** **Location: (010 ACL) -> {0xn, offset} -> 0xA0 holds the data.** **Matching Fields for Layer 2**				
7 - 0	MAC_ADDR [15:8]	MAC Address	R/W	00000000
Port_ACL_7 **ACL Port Register 7 (0x07)** **Reg. 110 (0x6E) Bits[7:5] = 010 for ACL, Reg. 110 Bits[3:0] = 0xn for Ports 1, 2, 3, 4, and 5.** **Reg. 111 (0x6F) Bits[7:0] = Offset 0x07 to access the Indirect Byte Register 0xA0.** **Location: (010 ACL) -> {0xn, offset} -> 0xA0 holds the data.** **Matching Fields for Layer 2**				
7 - 0	MAC_ADDR [7:0]	MAC Address	R/W	00000000
Port_ACL_8 **ACL Port Register 8 (0x08)** **Reg. 110 (0x6E) Bits[7:5] = 010 for ACL, Reg. 110 Bits[3:0] = 0xn for Ports 1, 2, 3, 4, and 5.** **Reg. 111 (0x6F) Bits[7:0] = Offset 0x08 to access the Indirect Byte Register 0xA0.** **Location: (010 ACL) -> {0xn, offset} -> 0xA0 holds the data.** **Matching Fields for Layer 2**				
7 - 0	TYPE[15:8]	Ether Type	R/W	00000000

© 2016-2017 Microchip Technology Inc.

TABLE 4-21: ACL INDIRECT REGISTERS FOR 14 BYTE ACL RULES (CONTINUED)

Address	Name	Description	Mode	Default
Port_ACL_9 **ACL Port Register 9 (0x09)** **Reg. 110 (0x6E) Bits[7:5] = 010 for ACL, Reg. 110 Bits[3:0] = 0xn for Ports 1, 2, 3, 4, and 5.** **Reg. 111 (0x6F) Bits[7:0] = Offset 0x09 to access the Indirect Byte Register 0xA0.** **Location: (010 ACL) -> {0xn, offset} -> 0xA0 holds the data.** **Matching Fields for Layer 2**				
7 - 0	TYPE[7:0]	Ether Type	R/W	00000000
Note: Layer 2, Layer 3, and Layer 4 in matching field should be in different entries. Same layer should be in same entry.				
Port_ACL_2 **ACL Port Register 2 (0x02)** **Reg. 110 (0x6E) Bits[7:5] = 010 for ACL, Reg. 110 Bits[3:0] = 0xn for Ports 1, 2, 3, 4, and 5.** **Reg. 111 (0x6F) Bits[7:0] = Offset 0x02 to access the Indirect Byte Register 0xA0.** **Location: (010 ACL) -> {0xn, offset} -> 0xA0 holds the data.** **Matching Fields for Layer 3**				
7 - 0	IP_ADDR [31:24]	IP Address	R/W	00000000
Port_ACL_3 **ACL Port Register 3 (0x03)** **Reg. 110 (0x6E) Bits[7:5] = 010 for ACL, Reg. 110 Bits[3:0] = 0xn for Ports 1, 2, 3, 4, and 5.** **Reg. 111 (0x6F) Bits[7:0] = Offset 0x03 to access the Indirect Byte Register 0xA0.** **Location: (010 ACL) -> {0xn, offset} -> 0xA0 holds the data.** **Matching Fields for Layer 3**				
7 - 0	IP_ADDR [23:16]	IP Address	R/W	00000000
Port_ACL_4 **ACL Port Register 4 (0x04)** **Reg. 110 (0x6E) Bits[7:5] = 010 for ACL, Reg. 110 Bits[3:0] = 0xn for Ports 1, 2, 3, 4, and 5.** **Reg. 111 (0x6F) Bits[7:0] = Offset 0x04 to access the Indirect Byte Register 0xA0.** **Location: (010 ACL) -> {0xn, offset} -> 0xA0 holds the data.** **Matching Fields for Layer 3 IP**				
7 - 0	IP_ADDR [15:8]	IP Address	R/W	00000000
Port_ACL_5 **ACL Port Register 5 (0x05)** **Reg. 110 (0x6E) Bits[7:5] = 010 for ACL, Reg. 110 bits[3:0] = 0xn for Ports 1, 2, 3, 4, and 5.** **Reg. 111 (0x6F) Bits[7:0] = Offset 0x05 to access the Indirect Byte Register 0xA0.** **Location: (010 ACL) -> {0xn, offset} -> 0xA0 holds the data.** **Matching Fields for Layer 3**				
7 - 0	IP_ADDR [7:0]	IP Address	R/W	00000000
Port_ACL_6 **ACL Port Register 6 (0x06)** **Reg. 110 (0x6E) Bits[7:5] = 010 for ACL, Reg. 110 Bits[3:0] = 0xn for Ports 1, 2, 3, 4, and 5.** **Reg. 111 (0x6F) Bits[7:0] = Offset 0x06 to access the Indirect Byte Register 0xA0.** **Location: (010 ACL) -> {0xn, offset} -> 0xA0 holds the data.** **Matching Fields for Layer 3**				
7 - 0	IP_Mask [31:24]	IP Mask	R/W	00000000

TABLE 4-21: ACL INDIRECT REGISTERS FOR 14 BYTE ACL RULES (CONTINUED)

Address	Name	Description	Mode	Default
Port_ACL_7 **ACL Port Register 7 (0x07)** **Reg. 110 (0x6E) Bits[7:5] = 010 for ACL, Reg. 110 Bits[3:0] = 0xn for Ports 1, 2, 3, 4, and 5.** **Reg. 111 (0x6F) Bits[7:0] = Offset 0x07 to access the Indirect Byte Register 0xA0.** **Location: (010 ACL) -> {0xn, offset} -> 0xA0 holds the data.** **Matching Fields for Layer 3**				
7 - 0	IP_Mask [23:16]	IP Mask	R/W	00000000
Port_ACL_8 **ACL Port Register 8 (0x08)** **Reg. 110 (0x6E) Bits[7:5] = 010 for ACL, Reg. 110 Bits[3:0] = 0xn for Ports 1, 2, 3, 4, and 5.** **Reg. 111 (0x6F) Bits[7:0] = Offset 0x08 to access the Indirect Byte Register 0xA0.** **Location: (010 ACL) -> {0xn, offset} -> 0xA0 holds the data.** **Matching Fields for Layer 3**				
7 - 0	IP_Mask [15:8]	IP Mask	R/W	00000000
Port_ACL_9 **ACL Port Register 9 (0x09)** **Reg. 110 (0x6E) Bits[7:5] = 010 for ACL, Reg. 110 Bits[3:0] = 0xn for Ports 1, 2, 3, 4, and 5.** **Reg. 111 (0x6F) Bits[7:0] = Offset 0x09 to access the Indirect Byte Register 0xA0.** **Location: (010 ACL) -> {0xn, offset} -> 0xA0 holds the data.** **Matching Fields for Layer 3**				
7 - 0	IP_Mask [7:0]	IP Mask	R/W	00000000
Note: Layer 2, Layer 3, and Layer 4 in matching field should be in different entries. Same layer should be in same entry.				
Port_ACL_2 **ACL Port Register 2 (0x02)** **Reg. 110 (0x6E) Bits[7:5] = 010 for ACL, Reg. 110 Bits[3:0] = 0xn for Ports 1, 2, 3, 4, and 5.** **Reg. 111 (0x6F) Bits[7:0] = Offset 0x02 to access the Indirect Byte Register 0xA0.** **Location: (010 ACL) -> {0xn, offset} -> 0xA0 holds the data.** **Matching Fields for Layer 4**				
7 - 0	MAX Port [15:8]	For range of TCP port number or sequence number matching	R/W	00000000
Port_ACL_3 **ACL Port Register 3 (0x03)** **Reg. 110 (0x6E) Bits[7:5] = 010 for ACL, Reg. 110 Bits[3:0] = 0xn for Ports 1, 2, 3, 4, and 5.** **Reg. 111 (0x6F) Bits[7:0] = Offset 0x03 to access the Indirect Byte Register 0xA0.** **Location: (010 ACL) -> {0xn, offset} -> 0xA0 holds the data.** **Matching Fields for Layer 4**				
7 - 0	MIN Port [7:0]	For range of TCP port number or sequence number matching	R/W	00000000
Port_ACL_4 **ACL Port Register 4 (0x04)** **Reg. 110 (0x6E) Bits[7:5] = 010 for ACL, Reg. 110 Bits[3:0] = 0xn for Ports 1, 2, 3, 4, and 5.** **Reg. 111 (0x6F) Bits[7:0] = Offset 0x04 to access the Indirect Byte Register 0xA0.** **Location: (010 ACL) -> {0xn, offset} -> 0xA0 holds the data.** **Matching Fields for Layer 4**				
7 - 3	Reserved	—	RO	00000

© 2016-2017 Microchip Technology Inc.

TABLE 4-21: ACL INDIRECT REGISTERS FOR 14 BYTE ACL RULES (CONTINUED)

Address	Name	Description	Mode	Default
2 - 1	PC[1:0]	00 = The port comparison is disabled. 01 = Matching either one of MAX or MIN. 10 = Match if the port number is in the range of MAX and MIN. 11 = Match if the port number is out of the range	R/W	00
0	PRO[7]	IP Protocol For the IP protocol to be matched	—	0
Port_ACL_5 **ACL Port Register 5 (0x05)** **Reg. 110 (0x6E) Bits[7:5] = 010 for ACL, Reg. 110 Bits[3:0] = 0xn for Ports 1, 2, 3, 4, and 5.** **Reg. 111 (0x6F) Bits[7:0] = Offset 0x05 to access the Indirect Byte Register 0xA0.** **Location: (010 ACL) -> {0xn, offset} -> 0xA0 holds the data.** **Matching Fields for Layer 4**				
7 - 1	PRO[6:0]	IP Protocol For the IP protocol to be matched	R/W	0000000
0	FME	Flag Match Enable 0 = Disable TCP FLAG matching 1 = Enable TCP FLAG matching	R/W	0
Port_ACL_6 **ACL Port Register 6 (0x06)** **Reg. 110 (0x6E) Bits[7:5] = 010 for ACL, Reg. 110 Bits[3:0] = 0xn for Ports 1, 2, 3, 4, and 5.** **Reg. 111 (0x6F) Bits[7:0] = Offset 0x06 to access the Indirect Byte Register 0xA0.** **Location: (010 ACL) -> {0xn, offset} -> 0xA0 holds the data.** **Matching Fields for Layer 4**				
7 - 0	FMSK[7:0]	TCP FLAG Mask	R/W	00000000
Port_ACL_7 **ACL Port Register 7 (0x07)** **Reg. 110 (0x6E) Bits[7:5] = 010 for ACL, Reg. 110 Bits[3:0] = 0xn for Ports 1, 2, 3, 4, and 5.** **Reg. 111 (0x6F) Bits[7:0] = Offset 0x07 to access the Indirect Byte Register 0xA0.** **Location: (010 ACL) -> {0xn, offset} -> 0xA0 holds the data.** **Matching Fields for Layer 4**				
7 - 0	FLAG[7:0]	TCP FLAG	R/W	00000000
Port_ACL_8 **ACL Port Register 8 (0x08)** **Reg. 110 (0x6E) Bits[7:5] = 010 for ACL, Reg. 110 Bits[3:0] = 0xn for Ports 1, 2, 3, 4, and 5.** **Reg. 111 (0x6F) Bits[7:0] = Offset 0x08 to access the Indirect Byte Register 0xA0.** **Location: (010 ACL) -> {0xn, offset} -> 0xA0 holds the data.**				
7 - 0	Reserved	—	RO	00000000
Port_ACL_9 **ACL Port Register 9 (0x09)** **Reg. 110 (0x6E) Bits[7:5] = 010 for ACL, Reg. 110 Bits[3:0] = 0xn for Ports 1, 2, 3, 4, and 5.** **Reg. 111 (0x6F) Bits[7:0] = Offset 0x09 to access the Indirect Byte Register 0xA0.** **Location: (010 ACL) -> {0xn, offset} -> 0xA0 holds the data.**				
7 - 0	Reserved	—	RO	00000000

Note: Layer 2, Layer 3, and Layer 4 in matching field should be in different entries. Same layer should be in same entry.

TABLE 4-21: ACL INDIRECT REGISTERS FOR 14 BYTE ACL RULES (CONTINUED)

Address	Name	Description	Mode	Default
Port_ACL_A **ACL Port Register 10 (0x0A)** **Reg. 110 (0x6E) Bits[7:5] = 010 for ACL, Reg. 110 Bits[3:0] = 0xn for Ports 1, 2, 3, 4, and 5.** **Reg. 111 (0x6F) Bits[7:0] = Offset 0x0A to access the Indirect Byte Register 0xA0.** **Location: (010 ACL) -> {0xn, offset} -> 0xA0 holds the data.** **Action Field**				
7 - 6	PM[1:0]	Priority Mode 00 = No priority is selected; the priority determined by QoS/Classification is used in the tagged packets. 01 = Priority in P [2:0] bits field is used if it is greater than QoS result in the 3-bit priority field of the tagged packets received. 10 = Priority in P [2:0] bits field is used if it is smaller than QoS result in the 3-bit priority field of the tagged packets received. 11 = P [2:0] bits field will replace the 3-bit priority field of the tagged packets received.	R/W	00
5 - 3	P[2:0]	Priority **Note:** The 3-bit priority value to be used depends on PM [1:0] setting in Bits[7:6].	R/W	000
2	RPE	Remark Priority Enable 0 = No remarking is necessary. 1 = VLAN priority bits in the packets are replaced by RP[2:1] bits field below in the list.	R/W	0
1 - 0	RP[2:1]	Remark Priority 00 = Priority 0 01 = Priority 1 10 = Priority 2 11 = Priority 3	R/W	00
Port_ACL_B **ACL Port Register 11 (0x0B)** **Reg. 110 (0x6E) Bits[7:5] = 010 for ACL, Reg. 110 Bits[3:0] = 0xn for Ports 1, 2, 3, 4, and 5.** **Reg. 111 (0x6F) Bits[7:0] = Offset 0x0B to access the Indirect Byte Register 0xA0.** **Location: (010 ACL) -> {0xn, offset} -> 0xA0 holds the data.** **Action Field**				
7	RP[0]	Remark Priority	R/W	0
6 - 5	MM[1:0]	Map Mode 00 = No forwarding remapping is necessary. Don't use the forwarding map in FORWARD field; use the forwarding map from the look-up table only. 01 = The forwarding map in FORWARD field is OR'ed with the forwarding map from the look-up table. 10 = The forwarding map in FORWARD field is AND'ed with the forwarding map from the look-up table. 11 = The forwarding map in FORWARD field replaces the forwarding map from the look-up table.	R/W	00

© 2016-2017 Microchip Technology Inc.

TABLE 4-21: ACL INDIRECT REGISTERS FOR 14 BYTE ACL RULES (CONTINUED)

Address	Name	Description	Mode	Default
4 - 0	FORWARD [4:0]	Port Map Each bit indicates forwarding decision of one port. Bit[0] = Port 1 Bit[1] = Port 2 Bit[2] = Port 3 Bit[3] = Port 4 Bit[4] = Port 5 When MD = 01 and ENB = 00, Bit[4] is used as count unit: 0 = µs 1 = ms Bit[3] is used to select count modes: 0 = count down in the 11-bit counter from an assigned value in the Action field PM, P, RPE, RP, and MM, an interrupt will be generated when expired. 1 = count up in the 11-bit counter for every matched packet received up to reach an assigned value in the Action field PM, P, RPE, RP and MM, and then an interrupt will be generated. **Note:** See ENB field description for detail.	R/W	—
Port_ACL_C **ACL Port Register 12 (0x0C)** **Reg. 110 (0x6E) Bits[7:5] = 010 for ACL, Reg. 110 Bits[3:0] = 0xn for Ports 1, 2, 3, 4, and 5.** **Reg. 111 (0x6F) Bits[7:0] = Offset 0x0C to access the Indirect Byte Register 0xA0.** **Location: (010 ACL) -> {0xn, offset} -> 0xA0 holds the data.** **Processing Field**				
7 - 0	RULESET [15:8]	Rule Set Each bit indicates this entry in bits 0 to 16, total 16 entries of the rule list can be assigned for the rule set to be used in the rules cascade per port.	R/W	00000000
Port_ACL_D **ACL Port Register 13 (0x0D)** **Reg. 110 (0x6E) Bits[7:5] = 010 for ACL, Reg. 110 Bits[3:0] = 0xn for Ports 1, 2, 3, 4, and 5.** **Reg. 111 (0x6F) Bits[7:0] = Offset 0x0D to access the Indirect Byte Register 0xA0.** **Location: (010 ACL) -> {0xn, offset} -> 0xA0 holds the data.** **Processing Field**				
7 - 0	RULESET [7:0]	Rule Set Each bit indicates this entry in bits 0 to 16, total 16 entries of the rule list can be assigned for the rule set to be used in the rules cascade per port.	R/W	00000000

TABLE 4-22: TEMPORAL STORAGE FOR 14 BYTES ACL RULES

Address	Name	Description	Mode	Default
Port_ACL_BYTE_ENB_MSB **ACL Port Register 14 (0x10)** **Reg. 110 (0x6E) Bits[7:5] = 010 for ACL, Reg. 110 Bits[3:0] = 0xn for Ports 1, 2, 3, and 4.** **Reg. 111 (0x6F) Bits[7:0] = Offset 0x10 to access the Indirect Byte Register 0xA0.** **Location: (010 ACL) -> {0xn, offset} -> 0xA0 holds the data.**				
7 - 6	Reserved	—	RO	00

TABLE 4-22: TEMPORAL STORAGE FOR 14 BYTES ACL RULES (CONTINUED)

Address	Name	Description	Mode	Default
5 - 0	BYTE_ENB [13:8]	Byte Enable in ACL table; 14-Byte per entry 1 = Byte is selected for read/write 0 = Byte is not selected Bit[0] of BYTE_ENB[13:0] is for byte address 0x0D in ACL table entry, Bit[1] of BYTE_ENB[13:0] is for byte address 0x0C in ACL table entry, etc. Bit[13] of BYTE_ENB[13:0] is for byte address 0x00 in ACL table entry.	R/W	0
Port_ACL_ BYTE_ENB_LSB **ACL Port Register 15 (0x11)** **Reg. 110 (0x6E) Bits[7:5] = 010 for ACL, Reg. 110 Bits[3:0] = 0xn for Ports 1, 2, 3, 4, and 5.** **Reg. 111 (0x6F) Bits[7:0] = Offset 0x11 to access the Indirect Byte Register 0xA0.** **Location: (010 ACL) -> {0xn, offset} -> 0xA0 holds the data.**				
7 - 0	BYTE_ENB [7:0]	Byte Enable in ACL table; 14-Byte per entry 1 = Byte is selected for read/write 0 = Byte is not selected Bit[0] of BYTE_ENB[13:0] is for byte address 0x0D in ACL table entry, Bit[1] of BYTE_ENB[13:0] is for byte address 0x0C in ACL table entry, etc. Bit[13] of BYTE_ENB[13:0] is for byte address 0x00 in ACL table entry.	R/W	0x00

TABLE 4-23: ACL READ/WRITE CONTROL

Address	Name	Description	Mode	Default
Port_ACL_ACCESS_CONTROL1 **ACL Port Register 16 (0x12)** **Reg. 110 (0x6E) Bits[7:5] = 010 for ACL, Reg. 110 Bits[3:0] = 0xn for Ports 1, 2, 3, 4, and 5.** **Reg. 111 (0x6F) Bits[7:0] = Offset 0x12 to access the Indirect Byte Register 0xA0.** **Location: (010 ACL) -> {0xn, offset} -> 0xA0 holds the data.**				
7	Reserved	—	RO	0
6	WRITE_ STATUS	Write Operation Status 1 = Write completed 0 = Write is in progress	RO	1
5	READ_ STATUS	Read Operation Status 1 = Read completed 0 = Read is in progress	RO	1
4	WRITE_ READ	Request Type 1 = Write 0 = Read	R/W	0

© 2016-2017 Microchip Technology Inc.

TABLE 4-23: ACL READ/WRITE CONTROL (CONTINUED)

Address	Name	Description	Mode	Default
3 - 0	ACL_ENTRY _ADDRESS	ACL Entry Address 0000 = Entry 0. 0001 = Entry 1. ….. 1111 = Entry 15.	R/W	0000
Port_ACL_ ACCESS_CONTROL2 **ACL Port Register 17 (0x13)** **Reg. 110 (0x6E) Bits[7:5] = 010 for ACL, Reg. 110 Bits[3:0] = 0xn for Ports 1, 2, 3, 4, and 5.** **Reg. 111 (0x6F) Bits[7:0] = Offset 0x13 to access the Indirect Byte Register 0xA0.** **Location: (010 ACL) -> {0xn, offset} -> 0xA0 holds the data.**				
7 - 1	Reserved	—	RO	0000000
0	Force DLR Miss	1 = DLR filtering uses single ACL entry. DLR packet matching the ACL entry will be considered as MISS 0 = DLR filtering uses multiple ACL entries. DLR packet matching the rule set for DLR packet will be considered as HIT. **Note:** DLR is defined as Device Level Redundancy.	R/W	0

The ACL registers can be programmed using the read/write examples following:

Examples:

Read Operation

1. Steps to set Byte Enable Register to select all bytes in ACL word from 0x00-0x0d in ACL table entry:

   Use the Indirect Access Control Register to select register to be read. To read Entry0 that is 1st entry of Port 1:

   Write 0x41 to Register 110 (0x6E) // select ACL and write to Port 1 (Port 2, 3, 4, and 5 are 0x42, 0x43, 0x44, and 0x45)

   Write 0x10 to Register 111 (0x6F) // trigger the write operation for Port 1 in the ACL Port Register 14 (Byte Enable MSB register) address.

   Write 0x3F into the Indirect Byte Register 160 (0xA0) for MSB of Byte Enable word.

   Write 0x41 to Register 110 (0x6E) // select write to Port 1.

   Write 0x11 to Register 111 (0x6F) // trigger the write operation for Port 1 in the ACL Port Register 15 (Byte Enable LSB Register) address. (The above 2 may be part of burst).

   Write 0xFF into the Indirect Byte Register 160 (0xA0) for LSB of Byte Enable word.

   Write 0x41 to Register 110 (0x6E) // select ACL and write operations to Port 1.

   Write 0x12 to Register 111 (0x6F) // Write ACL read/write control register address 0x12 to the indirect address in Register 111 to trigger the read operation for Port 1 in the ACL Port Register 16 (ACL Access Control Register) to read entry 0.

   Write 0x00 into the Indirect Byte Register 160 (0xA0)//ACL Port Register 16 (0x12) Bit[4] = 0 to read ACL and Bits[3:0] = 0x0 for entry 0.

2. Steps set ACL control register to read ACL entry word 0).

   Write 0x51 to Register 110 (0x6E) //select ACL and read to Port 1 (Port 2, 3, 4, and 5 are 0x52, 0x53, 0x54 and 0x55).

   Write 0x12 to Register 111 (0x6F) //trigger the read operation for Port 1 in the ACL Port Register 16 (ACL Access Control 1).

   Read the Indirect Byte Register 160 (0xA0) to get data (if bit[5] is set, the read completes in the ACL port Register 16 [0x12] and goes to next step. Otherwise, repeat the above polling step).

   Write 0x51 to Register 110 (0x6E) // select read to Port 1.

Write 0x00 to Register 111 (0x6F) // trigger the read/burst read operation(s) based on the Byte Enable Register setting by the Port 1 ACL access Register 0 (0x00). Read/Burst read the Indirect Byte Register 160 (0xA0) // to get data of ACL entry word 0, write 0x00 to 0x0D indirect address and read Register 160 (0xA0) after each byte address write to Register 111 (0x6F).

Write Operation

1. Steps set Byte Enable register to select odd address bytes in ACL word:

Use the Indirect Access Control Register to select register to be written. To write even byte number of 15th entry of Port 5:

Write 0x55 to Register 110 (0x6E) // select ACL and read to Port 5.

Write 0x12 to Register 111 (0x6F) // trigger the read operation for Port 5 ACL Access Control Register read.

Read the Indirect Byte Register 160 (0xA0) to get data (If Bit[6] is set, the previous write completes and go to next step. Otherwise, repeat the above polling step).

Write 0x45 to Register 110 (0x6E) // select ACL and write to Port 5.

Write 0x00 to Register 111 (0x6F) //set offset address for Port 5 ACL Port Register 0.

Write/Burst write the Indirect Byte Register 160 (0xA0) for ACL Port Register 0, 1, 2, …,13 from 0x00 to 0x0D) (Write or Burst write even bytes of Port 5 ACL access Registers 0, 1, …, 13 to holding buffer).

Write 0x45 to Register 110 (0x6E) // select ACL and write to Port 5.

Write 0x10 to Register 111 (0x6F) // trigger the write operation for Port 5 in the ACL Port Register 14 (Byte Enable MSB register).

Write 0x15 into the Indirect Byte Register 160 (0xA0) for MSB of Byte Enable word to enable odd bytes address 0x01, 0x03 and 0x05.

2. Steps set ACL Control Register to write ACL entry word 15 from holding buffer:

Write 0x45 to Register 110 (0x6E) // select write to Port 5.

Write 0x11 to Register 111 (0x6F) // trigger the write operation for Port 5 in the ACL Port Register 15 (Byte Enable LSB register).

Write 0x55 into the Indirect Byte Register 160 (0xA0) for LSB of Byte Enable word to enable odd bytes address 0x07, 0x09, 0x0B and 0x0D.

Write 0x45 to Register 110 (0x6E) // select write to Port 5.

Write 0x12 to Register 111 (0x6F) // write the port ACL access control register address (0x12) to the Indirect Address Register 111 for setting the write operation to Port 5 in the ACL Port Register 16 to write entry 15 bytes 1, 3, 5…,13.

Write 0x1F into the Indirect Byte Register 160 (0xA0) // for the write operation to 15th entry in the ACL Port Register 16 (0x12) bit4=1 to write ACL, Bits[3:0] = 0xF to write entry 15.

The bit arrangement of the example above assumes Layer 2 rule of MODE = 01 in ACL Port Register 1 (0x01), refer to ACL format for MODE = 10 and 11.

4.9 EEE Indirect Registers

The EEE function is for all copper ports only. The EEE registers are provided on global and per-port basis. These registers are read/write using indirect memory access as below: LPI means low power idle.

TABLE 4-24: EEE GLOBAL REGISTERS

Address	Name	Description	Mode	Default
EEE Global Register 0 **Global EEE QM Buffer Control Register** **Reg. 110 (0x6E) Bits[7:5] = 001 for EEE, Reg. 110 Bits[3:0] = 0x0 for the indirect global register,** **Reg. 111 (0x6F) Bits[7:0] = Offset to access the Indirect Byte Register 0xA0.** **Offset: 0x30 (Bits[15:8]), 0x31 (Bits[7:0])** **Location: (001 EEE) -> {0x0, offset} -> 0xA0 holds the data.**				
15 - 8	Reserved	—	RO	0x40

© 2016-2017 Microchip Technology Inc.

TABLE 4-24: EEE GLOBAL REGISTERS (CONTINUED)

Address	Name	Description	Mode	Default
7	LPI Terminated By Input Traffic Enable	1 = LPI request will be stopped if input traffic is detected. 0 = LPI request won't be stopped by input traffic.	R/W	0
6 - 0	Reserved	—	RO	0x10
EEE Global Register 1 **Global Empty TXQ to LPI Wait Time Control Register** **Reg. 110 (0x6E) Bits[7:5] = 001 for EEE, Reg. 110 Bits[3:0] = 0x0 for the indirect global register,** **Reg. 111 (0x6F) Bits[7:0] = Offset to access the Indirect Byte Register 0xA0.** **Offset: 0x32 (Bits[15:8]), 0x33 (Bits[7:0])** **Location: (001 EEE) -> {0x0, offset} -> 0xA0 holds the data.**				
15 - 0	Empty TXQ to LPI Wait Time	This register specifies the time that the LPI request will be generated after a TXQ has been empty exceeds this configured time. This is only valid when EEE 100BT is enabled. This setting will apply to all the ports. The unit is 1.3 ms. The default value is 1.3s (range from 1.3 ms to 86 seconds)	R/W	0x10
EEE Global Register 2 **Global EEE PCS DIAGNOSTIC Register** **Reg. 110 (0x6E) Bits[7:5] = 001 for EEE, Reg. 110 Bits[3:0] = 0x0 for the indirect global register,** **Reg. 111 (0x6F) Bits[7:0] = Offset to access the Indirect Byte Register 0xA0.** **Offset: 0x34(Bits[15:8]), 0x35 (Bits[7:0])** **Location: (001 EEE) -> {0x0, offset} -> 0xA0 holds the data.**				
15 - 12	Reserved	—	RO	0x6
11 - 8	Reserved	—	RO	0x8
7 - 4	Reserved	—	RO	0x0
3	Port 4 Next Page Enable	1 = Enable next page exchange during Auto-Negotiation. 0 = Skip next page exchange during Auto-Negotiation.	R/W	1
2	Port 3 Next Page Enable	1 = Enable next page exchange during Auto-Negotiation. 0 = Skip next page exchange during Auto-Negotiation.	R/W	1
1	Port 2 Next Page Enable	1 = Enable next page exchange during Auto-Negotiation. 0 = Skip next page exchange during Auto-Negotiation.	R/W	1
0	Port 1 Next Page Enable	1 = Enable next page exchange during Auto-Negotiation. 0 = Skip next page exchange during Auto-Negotiation.	R/W	1
EEE Global Register 3 **Global EEE Minimum LPI cycles before back to Idle Control Register** **Reg. 110 (0x6E) Bits[7:5] = 001 for EEE, Reg. 110 Bits[3:0] = 0x0 for the indirect global register,** **Reg. 111 (0x6F) Bits[7:0] = Offset to access the Indirect Byte Register 0xA0.** **Offset: 0x36 (Bits[15:8], 0x37 (Bits[7:0])** **Location: (001 EEE) -> {0x0, offset} -> 0xA0 holds the data.**				
15 - 0	Reserved	—	RO	0x0000

TABLE 4-24: EEE GLOBAL REGISTERS (CONTINUED)

Address	Name	Description	Mode	Default
EEE Global Register 4 **Global EEE Wakeup Error Threshold Control Register** **Reg. 110 (0x6E) Bits[7:5] = 001 for EEE, Reg. 110 Bits[3:0] = 0x0 for the indirect global register,** **Reg. 111 (0x6F) Bits[7:0] = Offset to access the Indirect Byte Register 0xA0.** **Offset: 0x38 (Bits[15:8]), 0x39 (Bits[7:0])** **Location: (001 EEE) -> {0x0, offset} -> 0xA0 holds the data.**				
15 - 0	EEE Wakeup Threshold	This value specifies the maximum time allowed for PHY to wake up. If wakeup time is longer than this, EEE wakeup error count will be incremented. **Note:** This is EEE standard, don't change.	RO	0x0201
EEE Global Register 5 **Global EEE PCS Diagnostic Control Register** **Reg. 110 (0x6E) Bits[7:5] = 001 for EEE, Reg. 110 Bits[3:0] = 0x0 for the indirect global register,** **Reg. 111 (0x6F) Bits[7:0] = Offset to access the Indirect Byte Register 0xA0.** **Offset: 0x3A (Bits[15:8]), 0x3B (Bits[7:0])** **Location: (001 EEE) -> {0x0, offset} -> 0xA0 holds the data.**				
15 - 0	Reserved	—	RO	0x0001

TABLE 4-25: EEE PORT REGISTERS

Address	Name	Description	Mode	Default
EEE Port Register 0 **Port Auto-Negotiation Expansion Status Register** **Reg. 110 (0x6E) Bits[7:5] = 001 for EEE, Reg. 110 Bits[3:0] = 0xn, n = 1-4 for the Indirect Port Register,** **Reg. 111 (0x6F) Bits[7:0] = Offset to access the Indirect Byte Register 0xA0.** **Offset: 0x0C (Bits[15:8]), 0x0D (Bits[7:0])** **Location: (001 EEE) -> {0xn, offset} -> 0xA0 holds the data.**				
15 - 7	Reserved	—	RO	9h000
6	Receive Next Page Location Able	1 = Received Next Page storage location is specified by bits[6:5] 0 = Received Next Page storage location is not specified by bits[6:5]	RO	1
5	Received Next Page Storage Location	1 = Link Partner Next Pages are stored in MIIM Register 8h (Additional next page) 0 = Link Partner Next Pages are stored in MIIM Register 5h	RO	1
4	Parallel Detection Fault	1 = A fault has been detected via the Parallel Detection function. 0 = A fault has not been detected via the Parallel Detection function. This bit is cleared after reading.	R/LH	0
3	Link Partner Next Page Able	1 = Link Partner is Next Page abled 0 = Link Partner is not Next Page abled	RO	0
2	Next Page Able	1 = Local Device is Next Page abled 0 = Local Device is not Next Page abled	RO	1
1	Page Received	1 = A New Page has been received 0 = A New Page has not been received	R/LH	0

© 2016-2017 Microchip Technology Inc.

TABLE 4-25: EEE PORT REGISTERS (CONTINUED)

Address	Name	Description	Mode	Default
0	Link Partner Auto-Negotiation Able	1 = Link Partner is Auto-Negotiation abled 0 = Link Partner is not Auto-Negotiation abled	RO	0
EEE Port Register 1 **Port Auto-Negotiation Next Page Transmit Register** **Reg. 110 (0x6E) Bits[7:5] = 001 for EEE, Reg. 110 Bits[3:0] = 0xn, n = 1-4 for the Indirect Port Register ,** **Reg. 111 (0x6F) Bits[7:0] = Offset to access the Indirect Byte Register 0xA0.** **Offset: 0x0E (Bits[15:8]), 0x0F (Bits[7:0])** **Location: (001 EEE) -> {0xn, offset} -> 0xA0 holds the data.** **This register doesn't need to be set if EEE Port Register 5 Bit[7] = 1 default for Automatically perform EEE capability**				
15	Next Page	Next Page (NP) is used by the Next Page function to indicate whether or not this is the last Next Page to be transmitted. NP shall be set as follows: 1 = Additional Next Page(s) will follow. 0 = Last page.	R/W	0
14	Reserved	—	RO	0
13	Message Page	Message Page (MP) is used by the Next Page function to differentiate a Message Page from an Unformatted Page. MP shall be set as follows: 1 = Message Page 0 = Unformatted Page	R/W	1
12	Acknowledge 2	Acknowledge 2 (Ack2) is used by the Next Page function to indicate that a device has the ability to comply with the message. Ack2 shall be set as follows: 1 = Will comply with message. 0 = Cannot comply with message.	R/W	0
11	Toggle	Toggle (T) is used by the Arbitration function to ensure synchronization with the Link Partner during Next Page exchange. This bit shall always take the opposite value of the Toggle bit in the previously exchanged Link Codeword. The initial value of the Toggle bit in the first Next Page transmitted is the inverse of Bit[11] in the base Link Codeword and, therefore, may assume a value of logic one or zero. The Toggle bit shall be set as follows: 1 = Previous value of the transmitted Link Codeword equal to logic zero. 0 = Previous value of the transmitted Link Codeword equal to logic one.	RO	0
10 - 0	Message/ Unformatted Code Field	Message/Unformatted Code field Bits[10:0]	R/W	1

TABLE 4-25: EEE PORT REGISTERS (CONTINUED)

Address	Name	Description	Mode	Default
EEE Port Register 2 **Port Auto-Negotiation Link Partner Next Page Receive Register** **Reg. 110 (0x6E) Bits[7:5] = 001 for EEE, Reg. 110 Bits[3:0] = 0xn, n = 1-4 for the Indirect Port Register,** **Reg. 111 (0x6F) Bits[7:0] = Offset to access the Indirect Byte Register 0xA0.** **Offset: 0x10 (Bits[15:8]), 0x11 (Bits[7:0])** **Location: (001 EEE) -> {0xn, offset} -> 0xA0 holds the data.**				
15	Next Page	Next Page (NP) is used by the Next Page function to indicate whether or not this is the last Next Page to be transmitted. NP shall be set as follows: 1 = Additional Next Page(s) will follow. 0 = Last page.	RO	0
14	Acknowledge	Acknowledge (Ack) is used by the Auto-Negotiation function to indicate that a device has successfully received its Link Partner's Link Codeword. The Acknowledge Bit is encoded in Bit D14 regardless of the value of the Selector Field or Link Codeword encoding. If no Next Page information is to be sent, this bit shall be set to logic one in the Link Codeword after the reception of at least three consecutive and consistent FLP Bursts (ignoring the Acknowledge bit value).	RO	0
13	Message Page	Message Page (MP) is used by the Next Page function to differentiate a Message Page from an Unformatted Page. MP shall be set as follows: 1 = Message Page 0 = Unformatted Page	RO	0
12	Acknowledge 2	Acknowledge 2 (Ack2) is used by the Next Page function to indicate that a device has the ability to comply with the message. Ack2 shall be set as follows: 1 = Will comply with message. 0 = Cannot comply with message.	RO	0
11	Toggle	Toggle (T) is used by the Arbitration function to ensure synchronization with the Link Partner during Next Page exchange. This bit shall always take the opposite value of the Toggle bit in the previously exchanged Link Codeword. The initial value of the Toggle bit in the first Next Page transmitted is the inverse of Bit[11] in the base Link Codeword and, therefore, may assume a value of logic one or zero. The Toggle bit shall be set as follows: 1 = Previous value of the transmitted Link Codeword equal to logic zero. 0 = Previous value of the transmitted Link Codeword equal to logic one.	RO	0
10 - 0	Message/ Unformatted Code Field	Message/Unformatted Code field bits [10:0]	RO	0

© 2016-2017 Microchip Technology Inc.

TABLE 4-25: EEE PORT REGISTERS (CONTINUED)

Address	Name	Description	Mode	Default
EEE Port Register 3 **Link Partner EEE Capability Status and Local Device EEE Capability Advisement Register** **Reg. 110 (0x6E) Bits[7:5] = 001 for EEE, Reg. 110 Bits[3:0] = 0xn, n = 1-4 for the Indirect Port Register,** **Reg. 111 (0x6F) Bits[7:0] = Offset to access the Indirect Byte Register 0xA0.** **Offset: 0x28 (Bits[15:8]), 0x29 (Bits[7:0])** **Location: (001 EEE) -> {0xn, offset} -> 0xA0 holds the data.**				
15	Reserved	—	RO	0
14	LP 10GBASE-KR EEE	1 = EEE is supported for 10GBASE-KR 0 = EEE is not supported for 10GBASE-KR **Note:** LP = Link Partner	RO	0
13	LP 10GBASE-KX4 EEE	1 = EEE is supported for 10GBASE-KX4 0 = EEE is not supported for 10GBASE-KX4	RO	0
12	LP 1000BASE-KX EEE	1 = EEE is supported for 1000BASE-KX 0 = EEE is not supported for 1000BASE-KX	RO	0
11	LP 10GBASE-T EEE	1 = EEE is supported for 10GBASE-T 0 = EEE is not supported for 10GBASE-T	RO	0
10	LP 1000BASE-T EEE	1 = EEE is supported for 1000BASE-T 0 = EEE is not supported for 1000BASE-T	RO	0
9	LP 100BASE-TX EEE	1 = EEE is supported for 100BASE-TX 0 = EEE is not supported for 100BASE-TX	RO	0
8 - 2	Reserved	—	RO	7h’0
1	Local 100BASE-TX EEE	1 = EEE is supported for 100BASE-TX 0 = EEE is not supported for 100BASE-TX **Note:** This is for local port to support EEE capability	R/W	1
0	Reserved	—	RO	0
EEE Port Register 4 **Port EEE Wake Up Error Count Register** **Reg. 110 (0x6E) Bits[7:5] = 001 for EEE, Reg. 110 Bits[3:0] = 0xn, n = 1-4 for the Indirect Port Register,** **Reg. 111 (0x6F) Bits[7:0] = Offset to access the Indirect Byte Register 0xA0.** **Offset: 0x2A (Bits[15:8]), 0x2B (Bits[7:0])** **Location: (001 EEE) -> {0xn, offset} -> 0xA0 holds the data.**				
15 - 0	EEE Wakeup Error Counter	This count is incremented by one whenever a wakeup from LPI to Idle state is longer than the Wake-Up error threshold time specified in EEE Global Register 4. The default of Wake-Up error threshold time is 20.5 µs. This register is read-cleared.	RO	0x0000

TABLE 4-25: EEE PORT REGISTERS (CONTINUED)

Address	Name	Description	Mode	Default
EEE Port Register 5 **Port EEE Control Register** **Reg. 110 (0x6E) Bits[7:5] = 001 for EEE, Reg. 110 Bits[3:0] = 0xn, n = 1-4 for the Indirect Port Register,** **Reg. 111 (0x6F) Bits[7:0] = Offset to access the Indirect Byte Register 0xA0.** **Offset: 0x2C (Bits[15:8]), 0x2D (bits[7:0])** **Location: (001 EEE) -> {0xn, offset} -> 0xA0 holds the data.**				
15	10BT EEE Disable	1 = 10BT EEE mode is disabled 0 = 10BT EEE mode is enabled **Note:** 10BT EEE mode save power by reducing signal amplitude only.	R/W	1
14 - 8	Reserved	—	RO	7h’0
7	H/W Based EEE NP Auto-Negotiation Enable	1 = H/W will automatically perform EEE capability exchange with Link Partner through next page exchange. EEE 100BT enable (Bit[0] of this register). Will be set by H/W if EEE capability is matched. 0 = H/W-based EEE capability exchange is off. EEE capability exchange is done by software.	R/W	1
6	H/W 100BT EEE Enable Status	1 = 100BT EEE is enabled by H/W-based np exchange 0 = 100BT EEE is disabled	R	0
5	TX LPI Received	1 = Indicates that the transmit PCS has received low power idle signaling one or more times since the register was last read. 0 = Indicates that the PCS has not received low power idle signaling. This bit is cleared after reading.	R/RC	0
4	TX LPI Indication	1 = Indicates that the transmit PCS is currently receiving low power idle signals. 0 = Indicates that the PCS is not currently receiving low power idle signals.	R	0
3	RX LPI Received	1 = Indicates that the receive PCS has received low power idle signaling one or more times since the register was last read. 0 = Indicates that the PCS has not received low power idle signaling. This bit is cleared after reading.	R/RC	0
2	RX LPI Indication	1 = Indicates that the receive PCS is currently receiving low power idle signals. 0 = Indicates that the PCS is not currently receiving low power idle signals.	R	0
1	EEE SW Mode Enable	1 = EEE is enabled through S/W setting Bit[0] of this register. 0 = EEE is enabled through H/W Auto-Negotiation	R/W	0
0	EEE SW 100BT Enable	1 = EEE 100BT is enabled 0 = EEE 100BT is disabled **Note:** This bit could be set by S/W or H/W if H/W-based EEE Next Page Auto-Negotiation enable is on.	R/W	0

© 2016-2017 Microchip Technology Inc.

TABLE 4-25: EEE PORT REGISTERS (CONTINUED)

Address	Name	Description	Mode	Default
EEE Port Register 6 **Port EEE LPI Recovery Time Register** **Reg. 110 (0x6E) Bits[7:5] = 001 for EEE, Reg. 110 Bits[3:0] = 0xn, n = 1-4 for the Indirect Port Register,** **Reg. 111 (0x6F) Bits[7:0] = Offset to access the Indirect Byte Register 0xA0.** **Offset: 0x2E (Bits[15:8]), 0x2F (Bits[7:0])** **Location: (001 EEE) -> {0xn, offset} -> 0xA0 holds the data.**				
15 - 8	Reserved	—	RO	1
7 - 0	LPI Recovery Counter	This register specifies the time that the MAC device has to wait before it can start to send out packets. This value should be the maximum of the LPI recovery time between local device and remote device. The unit is 640 ns. The default is about 25 µs = 39 (0x27) × 640 ns **Note:** This value can be adjusted if PHY recovery time is less than the standard 20.5 µs for the packets to be sent out quickly from EEE LPI mode.	R/W	0x27

Programming Examples:

Read Operation

1. Use the Indirect Access Control Register to select register to be read, to read the EEE Global Register 0 (Global EEE QM Buffer Control Register).
2. Write 0x30 to the Register 110 (0x6E) // EEE selected and read operation, and 4 MSBs of port number = 0 for the global register.
3. Write 0x30 to the Indirect Register 111 (0x6F) // trigger the read operation and ready to read the EEE Global Register 0 Bits[15:8].
4. Read the Indirect Byte Register 160 (0xA0) // Get the Bits[15:8] value of the EEE Global Register 0.

Write Operation

1. Write 0x20 to Register 110 (0x6E) // EEE selected and write operation, 4 MSBs of port number = 0 is for global register.
2. Write 0x31 to Register 111 (0x6F) // select the offset address, ready to write the EEE Global Register 0 Bits[7:0].
3. Write new value to the Indirect Byte Register 160 (0xA0) Bits[7:0].

4.10 Management Information Base (MIB) Counters

The MIB counters are provided on per port basis. These counters are read using indirect memory access as in Table 4-26.

TABLE 4-26: PORT MIB COUNTER INDIRECT MEMORY OFFSETS

Offset	Counter Name	Description
0x0	RxHiPriorityByte	Rx hi-priority octet count including bad packets.
0x1	RxUndersizePkt	Rx undersize packets w/good CRC.
0x2	RxFragments	Rx fragment packets w/bad CRC, symbol errors or alignment errors.
0x3	RxOversize	Rx oversize packets w/good CRC (maximum: 1536 or 1522 bytes).
0x4	RxJabbers	Rx packets longer than 1522 bytes w/either CRC errors, alignment errors, or symbol errors (depends on max packet size setting) or Rx packets longer than 1916 bytes only.
0x5	RxSymbolError	Rx packets w/ invalid data symbol and legal preamble, packet size.
0x6	RxCRCerror	Rx packets within (64,1522) bytes w/an integral number of bytes and a bad CRC (upper limit depends on max packet size setting).

TABLE 4-26: PORT MIB COUNTER INDIRECT MEMORY OFFSETS (CONTINUED)

Offset	Counter Name	Description
0x7	RxAlignmentError	Rx packets within (64,1522) bytes w/a non-integral number of bytes and a bad CRC (upper limit depends on max packet size setting).
0x8	RxControl8808Pkts	The number of MAC control frames received by a port with 88-08h in EtherType field.
0x9	RxPausePkts	The number of PAUSE frames received by a port. PAUSE frame is qualified with EtherType (88-08h), DA, control opcode (00-01), data length (64 byte min), and a valid CRC.
0xA	RxBroadcast	Rx good broadcast packets (not including errored broadcast packets or valid multicast packets).
0xB	RxMulticast	Rx good multicast packets (not including MAC control frames, errored multicast packets or valid broadcast packets).
0xC	RxUnicast	Rx good unicast packets.
0xD	Rx64Octets	Total Rx packets (bad packets included) that were 64 octets in length.
0xE	Rx65to127Octets	Total Rx packets (bad packets included) that are between 65 and 127 octets in length.
0xF	Rx128to255Octets	Total Rx packets (bad packets included) that are between 128 and 255 octets in length.
0x10	Rx256to511Octets	Total Rx packets (bad packets included) that are between 256 and 511 octets in length.
0x11	Rx512to1023Octets	Total Rx packets (bad packets included) that are between 512 and 1023 octets in length.
0x12	Rx1024to1522Octets	Total Rx packets (bad packets included) that are between 1024 and 1522 octets in length.
0x13	Rx1523to2000Octets	Total Rx packets (bad packets included) that are between 1523 and 2000 octets in length.
0x14	Rx2001toMax-1Octets	Total Rx packets (bad packets included) that are between 2001 and Max-1 octets in length (upper limit depends on max packet size ?1).
0x15	TxHiPriorityByte	Tx hi-priority good octet count, including PAUSE packets.
0x16	TxLateCollision	The number of times a collision is detected later than 512 bit-times into the Tx of a packet.
0x17	TxPausePkts	The number of PAUSE frames transmitted by a port.
0x18	TxBroadcastPkts	Tx good broadcast packets (not including errored broadcast or valid multicast packets).
0x19	TxMulticastPkts	Tx good multicast packets (not including errored multicast packets or valid broadcast packets).
0x1A	TxUnicastPkts	Tx good unicast packets.
0x1B	TxDeferred	Tx packets by a port for which the 1st Tx attempt is delayed due to the busy medium.
0x1C	TxTotalCollision	Tx total collision, half-duplex only.
0x1D	TxExcessiveCollision	A count of frames for which Tx fails due to excessive collisions.
0x1E	TxSingleCollision	Successful Tx frames on a port for which Tx is inhibited by exactly one collision.
0x1F	TxMultipleCollision	Successful Tx frames on a port for which Tx is inhibited by more than one collision.

© 2016-2017 Microchip Technology Inc.

TABLE 4-27: FORMAT OF PER-PORT MIB COUNTER

Address	Name	Description	Mode	Default
For Port 2, the base is 0x20, same offset definition (0x20-0x3f) For Port 3, the base is 0x40, same offset definition (0x40-0x5f) For Port 4, the base is 0x60, same offset definition (0x60-0x7f) For Port 5, the base is 0x80, same offset definition (0x80-0x9f)				
38	Overflow	1 = Counter overflow. 0 = No Counter overflow.	RO	0
37	Count Valid	1 = Counter value is valid. 0 = Counter value is not valid.	RO	0
36 - 30	Reserved	—	RO	All ‘0’
29 - 0	Counter Values	Counter Value	RO	0

TABLE 4-28: ALL PORT DROPPED PACKET MIB COUNTERS

Offset	Counter Name	Description
0x100	Port 1 Rx Total Bytes	Port 1 Rx total octet count, including bad packets.
0x101	Port 1 Tx Total Bytes	Port 1 Tx total good octet count, including PAUSE packets.
0x102	Port 1 Rx Drop Packets	Port 1 Rx packets dropped due to lack of resources.
0x103	Port 1 Tx Drop Packets	Port 1 Tx packets dropped due to lack of resources.
0x104	Port 2 Rx Total Bytes	Port 2 Rx total octet count, including bad packets.
0x105	Port 2 Tx Total Bytes	Port 2 Tx total good octet count, including PAUSE packets.
0x106	Port 2 Rx Drop Packets	Port 2 Rx packets dropped due to lack of resources.
0x107	Port 2 Tx Drop Packets	Port 2 Tx packets dropped due to lack of resources.
0x108	Port 3 Rx Total Bytes	Port 3 Rx total octet count, including bad packets.
0x109	Port 3 Tx Total Bytes	Port 3 Tx total good octet count, including PAUSE packets.
0x10A	Port 3 Rx Drop Packets	Port 3 Rx packets dropped due to lack of resources.
0x10B	Port 3 Tx Drop Packets	Port 3 Tx packets dropped due to lack of resources.
0x10C	Port 4 Rx Total Bytes	Port 4 Rx total octet count, including bad packets.
0x10D	Port 4 Tx Total Bytes	Port 4 Tx total good octet count, including PAUSE packets.
0x10E	Port 4 Rx Drop Packets	Port 4 Rx packets dropped due to lack of resources.
0x10F	Port 4 Tx Drop Packets	Port 4 Tx packets dropped due to lack of resources.
0x110	Port 5 Rx Total Bytes	Port 5 Rx total octet count, including bad packets.
0x111	Port 5 Tx Total Bytes	Port 5 Tx total good octet count, including PAUSE packets.
0x112	Port 5 Rx Drop Packets	Port 5 Rx packets dropped due to lack of resources.
0x113	Port 5 Tx Drop Packets	Port 5 Tx packets dropped due to lack of resources.

TABLE 4-29: FORMAT OF PER-PORT RX/TX TOTAL BYTES MIB COUNTER (IN TABLE 4-28)

Address	Name	Description	Mode	Default
38	Overflow	1 = Counter overflow. 0 = No Counter overflow.	RO	0
37	Count Valid	1 = Counter value is valid. 0 = Counter value is not valid.	RO	0
36	Reserved	—	RO	0
35 - 0	Counter Values	Counter value	RO	0

TABLE 4-30: FORMAT OF ALL DROPPED PACKET MIB COUNTER (IN TABLE 4-28)

Address	Name	Description	Mode	Default
38	Overflow	1 = Counter overflow. 0 = No Counter overflow.	RO	0
37	Count Valid	1 = Counter value is valid. 0 = Counter value is not valid.	RO	0
36 - 16	Reserved	—	RO	All ‘0’
15 - 0	Counter Values	Counter value	RO	0

Please note that all per-port MIB counters are Read-Clear.

KSZ8795CLX also offers the statistic control capability by the Global Register 8 to control MIB to flush counter or freeze counter per port.

The KSZ8795CLX provides a total of 36 MIB counters per port. These counters are used to monitor the port activity for network management and maintenance. These MIB counters are read using indirect memory access, per the following examples.

1. MIB counter read (read Port 1 Rx64Octets counter)

   Write to Register 110 with 0x1c (read MIB counters selected)

   Write to Register 111 with 0xd (trigger the read operation)

Then:

   Read Register 116 (counter value [39:32])

   // If Bit [38] = 1, there was a counter overflow

   Read Register 117 (counter value [31:24])

   Read Register 118 (counter value [23:16])

   Read Register 119 (counter value [15:8])

   Read Register 120 (counter value [7:0])

2. MIB counter read (read Port 2 Rx64Octets counter)

   Write to Register 110 with 0x1c (read MIB counter selected)

   Write to Register 111 with 0x2d (trigger the read operation)

Then:

   Read Register 116 (counter value [39:32])

   // If Bit[38] = 1, there was a counter overflow

   Read Register 117 (counter value [31:24])

   Read Register 118 (counter value [23:16])

   Read Register 119 (counter value [15:8])

   Read Register 120 (counter value [7:0])

3. MIB counter read (read Port 1 TX drop packets)

   Write to Register 110 with 0x1d

   Write to Register 111 with 0x03

Then:

   Read Register 116 (counter value [39:32])

   // If Bit[38] = 1, there was a counter overflow

   Read Register 119 (counter value [15:8])

   Read Register 120 (counter value [7:0])

© 2016-2017 Microchip Technology Inc.

To read out all the counters, the best performance over the SPI bus is (160+3) × 8 × 20 = 26 µs, where there are 160 registers, 3 overhead, 8 clocks per access, at 50 MHz. In the heaviest condition, the byte counter will overflow in 2 minutes. It is recommended that the software read all the counters at least every 30 seconds. All port MIB counters are designed as “read clear.”

4.11 MIIM Registers

All the registers defined in this section can be also accessed via the SPI interface.

Note that different mapping mechanisms are used for MIIM and SPI. The “PHYAD” defined in IEEE is assigned as “0x1” for Port 1, “0x2” for Port 2, “0x3” for Port 3 and “0x4” for Port 4. The “REGAD” supported are 0x0-0x5 (0h-5h), 0x1D (1dh) and 0x1F (1fh).

TABLE 4-31: MIIM REGISTERS

Address	Name	Description	Mode	Default
Register 0h: Basic Control				
15	Soft Reset	1 = PHY soft reset. 0 = Normal operation.	R/W (SC)	0
14	Loopback	1 = Perform MAC loopback, loopback path as follows: Assume the loopback is at Port 1 MAC, Port 2 is the monitor port. Port 1 MAC Loopback (Port 1 Reg. 0, Bit[14] = ‘1’ Start: RXP2/RXM2 (Port 2). Can also start from Port 3, 4, 5 Loopback: MAC/PHY interface of Port 1’s MAC End: TXP2/TXM2 (Port 2). Can also end at Ports 3, 4, 5 respectively Setting address 0x3, 4, 5 Reg. 0, Bit[14] = ‘1’ will perform MAC loopback on Ports 3, 4, 5, respectively. 0 = Normal Operation.	R/W	0
13	Force 100	1 = 100 Mbps. 0 = 10 Mbps.	R/W	1
12	AN Enable	1 = Auto-Negotiation enabled. 0 = Auto-Negotiation disabled.	R/W	1
11	Power Down	1 = Power down. 0 = Normal operation.	R/W	0
10	PHY Isolate	1 = Electrical PHY isolation of PHY from Tx+/Tx-. 0 = Normal operation.	R/W	0
9	Restart AN	1 = Restart Auto-Negotiation. 0 = Normal operation.	R/W	0
8	Force Full Duplex	1 = Full duplex. 0 = Half duplex.	R/W	1
7	Reserved	—	RO	0
6	Reserved	—	RO	0
5	Hp_mdix	1 = HP Auto-MDI/MDIX mode 0 = Microchip Auto-MDI/MDIX mode	R/W	1
4	Force MDI	1 = MDI mode when disable Auto-MDI/MDIX. 0 = MDIX mode when disable Auto-MDI/MDIX.	R/W	0
3	Disable Auto MDI/MDI-X	1 = Disable Auto-MDI/MDIX. 0 = Enable Auto-MDI/MDIX.	R/W	0
2	Disable Far End Fault	1 = Disable far end fault detection. 0 = Normal operation.	R/W	0

TABLE 4-31: MIIM REGISTERS (CONTINUED)

Address	Name	Description	Mode	Default
1	Disable Transmit	1 = Disable transmit. 0 = Normal operation.	R/W	0
0	Disable LED	1 = Disable LED. 0 = Normal operation.	R/W	0
Register 1h: Basic Status				
15	T4 Capable	0 = Not 100 BASET4 capable.	RO	0
14	100 Full Capable	1 = 100BASE-TX full-duplex capable. 0 = Not capable of 100BASE-TX full-duplex.	RO	1
13	100 Half Capable	1 = 100BASE-TX half-duplex capable. 0 = Not 100BASE-TX half-duplex capable.	RO	1
12	10 Full Capable	1 = 10BASE-T full-duplex capable. 0 = Not 10BASE-T full-duplex capable.	RO	1
11	10 Half Capable	1 = 10BASE-T half-duplex capable. 0 = 10BASE-T half-duplex capable.	RO	1
10 - 7	Reserved	—	RO	0
6	Reserved	—	RO	0
5	AN Complete	1 = Auto-Negotiation complete. 0 = Auto-Negotiation not completed.	RO	0
4	Far End Fault	1 = Far end fault detected. 0 = No far end fault detected.	RO	0
3	AN Capable	1 = Auto-Negotiation capable. 0 = Not Auto-Negotiation capable.	RO	1
2	Link Status	1 = Link is up. 0 = Link is down.	RO	0
1	Reserved	—	RO	0
0	Extended Capable	0 = Not extended register capable.	RO	0
Register 2h: PHYID HIGH				
15 - 0	Phyid High	High order PHYID bits.	RO	0x0022
Register 3h: PHYID LOW				
15 - 0	Phyid Low	Low order PHYID bits.	RO	0x1550
Register 4h: Advertisement Ability				
15	Reserved	—	RO	0
14	Reserved	—	RO	0
13	Reserved	—	RO	0
12 - 11	Reserved	—	RO	01
10	Pause	1 = Advertise pause ability. 0 = Do not advertise pause ability.	R/W	1
9	Reserved	—	R/W	0
8	Adv 100 Full	1 = Advertise 100 full-duplex ability. 0 = Do not advertise 100 full-duplex ability.	R/W	1
7	Adv 100 Half	1 = Advertise 100 half-duplex ability. 0 = Do not advertise 100 half-duplex ability.	R/W	1
6	Adv 10 Full	1 = Advertise 10 full-duplex ability. 0 = Do not advertise 10 full-duplex ability.	R/W	1
5	Adv 10 Half	1 = Advertise 10 half-duplex ability. 0 = Do not advertise 10 half-duplex ability.	R/W	1

© 2016-2017 Microchip Technology Inc.

TABLE 4-31: MIIM REGISTERS (CONTINUED)

Address	Name	Description	Mode	Default
4 - 0	Selector Field	[00001] = IEEE 802.3	RO	00001
Register 5h: Link Partner Ability				
15	Reserved	—	RO	0
14	Reserved	—	RO	0
13	Reserved	—	RO	0
12 - 11	Reserved	—	RO	0
10	Pause	1 = Link partner flow control capable. 0 = Link partner not flow control capable.	RO	0
9	Reserved	—	RO	0
8	Adv 100 Full	1 = Link partner 100BT full-duplex capable. 0 = Link partner not 100BT full-duplex capable.	RO	0
7	Adv 100 Half	1 = Link partner 100BT half-duplex capable. 0 = Link partner not 100BT half-duplex capable.	RO	0
6	Adv 10 Full	1 = Link partner 10BT full-duplex capable. 0 = Link partner not 10BT full-duplex capable.	RO	0
5	Adv 10 Half	1 = Link partner 10BT half-duplex capable. 0 = Link partner not 10BT half-duplex capable.	RO	0
4 - 0	Reserved	—	RO	00001
Register 1dh: LinkMD Control/Status				
15	CDT_Enable	1 = Enable cable diagnostic. After CDT test has completed, this bit will be self-cleared. 0 = Indicates cable diagnostic test (if enabled) has completed and the status information is valid for reading.	R/W (SC)	0
14 - 13	CDT_Result	00 = Normal condition 01 = Open condition detected in cable 10 = Short condition detected in cable 11 = Cable diagnostic test has failed	RO	00
12	CDT 10M Short	1 = Less than 10 meter short	RO	0
11 - 9	Reserved	—	RO	0
8 - 0	CDT_-Fault_Count	Distance to the fault, approximately 0.4m × CDT_-Fault_Count[8:0]	RO	000000000
Register 1fh: PHY Special Control/Status				
15 - 11	Reserved	—	RO	0000000000
10 - 8	Port Operation Mode Indication	Indicate the current state of port operation mode: 000 = Reserved 001 = still in auto-negotiation 010 = 10BASE-T half duplex 011 = 100BASE-TX half duplex 100 = Reserved 101 = 10BASE-T full duplex 110 = 100BASE-TX full duplex 111 = PHY/MII isolate	RO	001
7 - 6	Reserved	—	RO	00
5	Polrvs	1 = Polarity is reversed 0 = Polarity is not reversed	RO	0
4	MDI-X Status	1 = MDI 0 = MDI-X	RO	0

TABLE 4-31: MIIM REGISTERS (CONTINUED)

Address	Name	Description	Mode	Default
3	Force_lnk	1 = Force link pass 0 = Normal operation	R/W	0
2	Pwrsave	1 = Enable power save 0 = Disable power save	R/W	0
1	Remote Loopback	1 = Perform Remote loopback, loop back path as follows: Port 1 (PHY ID address 0x1 Reg. 1fh, Bit[1] = ‘1’ Start: RXP1/RXM1 (Port 1) Loopback: PMD/PMA of Port 1’s PHY End: TXP1/TXM1 (Port 1) Setting PHY ID address 0x2, 3, 4, 5 Reg. 1fh, Bit[1] = ‘1’, will perform remote loopback on Ports 2, 3, 4, 5. 0 = Normal Operation.	R/W	0
0	Reserved	—	RO	0

© 2016-2017 Microchip Technology Inc.

5.0 OPERATIONAL CHARACTERISTICS

5.1 Absolute Maximum Ratings*

Supply Voltage
(V_{DD12A}, V_{DD12D}) ..... –0.5V to +1.8V
(V_{DDAT}, V_{DDIO}) ..... –0.5V to +4.0V
Input Voltage ..... –0.5V to +4.0V
Output Voltage ..... –0.5V to +4.0V
Lead Temperature (soldering, 10s) ..... +260°C
Storage Temperature (T_S) ..... –55°C to +150°C
Maximum Junction Temperature ..... +125°C
ESD Rating ..... 5 kV

*Exceeding the absolute maximum rating may damage the device. Stresses greater than the absolute maximum rating may cause permanent damage to the device. Operation of the device at these or any other conditions above those specified in the operating sections of this specification is not implied. Maximum conditions for extended periods may affect reliability.

5.2 Operating Ratings**

Supply Voltage
(V_{DD12A}, V_{DD12D}) ..... +1.140V to +1.260V
(V_{DDAT} @ 3.3V) ..... +3.135V to +3.465V
(V_{DDAT} @ 2.5V) ..... +2.375V to +2.625V
(V_{DDIO} @ 3.3V) ..... +3.135V to +3.465V
(V_{DDIO} @ 2.5V) ..... +2.375V to +2.625V
(V_{DDIO} @ 1.8V) ..... +1.710V to +1.890V
Ambient Temperature (T_A)
Commercial ..... 0°C to +70°C
Industrial ..... –40°C to +85°C
Package Thermal Resistance (Θ_{JA}, Note 5-1) ..... +55.05°C/W
Package Thermal Resistance (Θ_{JC}, Note 5-1)+25.06°C/W**The device is not guaranteed to function outside its operating ratings. Unused inputs must always be tied to an appropriate logic voltage level (GND or V_{DD}).

Note 5-1 No heat spreader in package. The thermal junction-to-ambient (Θ_{JA}) and the thermal junction-to-case (Θ_{JC}) are under air velocity 0m/s.

Note: Do not drive input signals without power supplied to the device.

6.0 ELECTRICAL CHARACTERISTICS

V_{IN} = 1.2V/3.3V (typical); T_A = +25°C. Specification is for packaged product only. There is no additional transformer consumption due to use on chip termination technology with internal biasing for 10BASE-T and 100BASE-TX. The test condition is in Port 5 RGMII mode (default). Measurements were taken with operating ratings.

TABLE 6-1: ELECTRICAL CHARACTERISTICS

Parameters	Symbol	Min.	Typ.	Max.	Units	Note
100BASE-TX Operation - All Ports 100% Utilization						
100BASE-TX (Transmitter) 3.3V Analog	I_{DX}	—	142	—	mA	V_{DDAT}
100BASE-TX 1.2V	I_{D12}	—	35	—		V_{DD12A} + V_{DD12D}
100BASE-TX (Digital IO) 3.3V Digital	I_{DDIO}	—	15	—		V_{DDIO}
10BASE-T Operation - All Ports 100% Utilization						
10BASE-T (Transmitter) 3.3V Analog	I_{DX}	—	135	—	mA	V_{DDAT}
10BASE-T 1.2V	I_{D12}	—	30	—		V_{DD12A} + V_{DD12D}
10BASE-T (Digital IO) 3.3V Digital	I_{DDIO}	—	14	—		V_{DDIO}
Auto-Negotiation Mode						
3.3V Analog	I_{DX}	—	66	—	mA	V_{DDAT}
1.2V Analog/Digital	I_{D12}	—	35	—		V_{DD12A} + V_{DD12D}
3.3V Digital I/O	I_{DDIO}	—	14	—		V_{DDIO}
Power Management Mode						
Soft Power-Down Mode 3.3V	I_{SPDM1}	—	0.07	—	mA	V_{DDAT} + V_{DDIO}
Soft Power-Down Mode 1.2V	I_{SPDM2}	—	0.2	—		V_{DD12A} + V_{DD12D}
Energy Detect Mode (EDPD) 3.3V	I_{EDM1}	—	21	—		V_{DDAT} + V_{DDIO}
Energy Detect Mode (EDPD) 1.2V	I_{EDM2}	—	26.5	—		V_{DD12A} + V_{DD12D}
100BT EEE Mode at Idle 3.3V	I_{EEE1}	—	22.5	—		V_{DDAT} + V_{DDIO}
100BT EEE Mode at Idle 1.2V	I_{EEE2}	—	27	—		V_{DD12A} + V_{DD12D}
CMOS Input						
Input High Voltage	V_{IH}	2.0	—	—	V	V_{DDIO} = 3.3V
		1.8	—	—		V_{DDIO} = 2.5V
		1.3	—	—		V_{DDIO} = 1.8V
Input Low Voltage	V_{IL}	—	—	0.8	V	V_{DDIO} = 3.3V
		—	—	0.7		V_{DDIO} = 2.5V
		—	—	0.5		V_{DDIO} = 1.8V
Input Current (Excluding Pull-Up/Pull-Down)	I_{IN}	—	—	10	µA	V_{IN} = GND ~ V_{DDIO}
CMOS Outputs						
Output High Voltage	V_{OH}	2.4	—	—	V	V_{DDIO} = 3.3V
		2.0	—	—		V_{DDIO} = 2.5V
		1.5	—	—		V_{DDIO} = 1.8V

© 2016-2017 Microchip Technology Inc.

TABLE 6-1: ELECTRICAL CHARACTERISTICS (CONTINUED)

Parameters	Symbol	Min.	Typ.	Max.	Units	Note
Output Low Voltage	V_{OL}	—	—	0.4	V	V_{DDIO} = 3.3V
		—	—	0.4		V_{DDIO} = 2.5V
		—	—	0.3		V_{DDIO} = 1.8V
Output Tri-State Leakage	I_{OZ}	—	—	10	µA	V_{IN} = GND ~ V_{DDIO}
100BASE-TX Transmit (measured differentially after 1:1 transformer)						
Peak Differential Output Voltage	V_O	0.95	—	1.05	V	100Ω termination on the differential output
Output Voltage Imbalance	V_{IMB}	—	—	2	%	100Ω termination on the differential output
Rise/Fall Time	t_r/t_f	3	—	5	ns	—
Rise/Fall Time Imbalance		0	—	0.5		—
Duty Cycle Distortion	—	—	—	±0.5	ns	—
Overshoot	—	—	—	5	%	—
Output Jitters	—	0	0.75	1.4	ns	Peak-to-Peak
10BASE-T Receive						
Squelch Threshold	V_{SQ}	300	400	585	mV	5 MHz square wave
10BASE-T Transmit (measured differentially after 1:1 transformer) V_{DDAT} = 3.3V						
Peak Differential Output Voltage	V_P	2.2	2.5	2.8	V	100Ω termination on the differential output
Output Jitters	—	—	1.4	3.5	ns	Peak-to-Peak
Rise/Fall Times	—	—	28	30	ns	—
I/O Pin Internal Pull-Up and Pull-Down Resistance						
I/O Pin Effective Pull-Up Resistance	$R_{1.8PU}$	75	95	135	kΩ	V_{DDIO} = 1.8V
I/O Pin Effective Pull-Down Resistance	$R_{1.8PD}$	53	68	120		V_{DDIO} = 1.8V
I/O Pin Effective Pull-Up Resistance	$R_{2.5PU}$	46	60	93		V_{DDIO} = 2.5V
I/O Pin Effective Pull-Down Resistance	$R_{2.5PD}$	46	59	103		V_{DDIO} = 2.5V
I/O Pin Effective Pull-Up Resistance	$R_{3.3PU}$	35	45	65		V_{DDIO} = 3.3V
I/O Pin Effective Pull-Down Resistance	$R_{3.3PD}$	37	46	74		V_{DDIO} = 3.3V

7.0 TIMING DIAGRAMS

FIGURE 7-1: GMII SIGNALS TIMING DIAGRAM

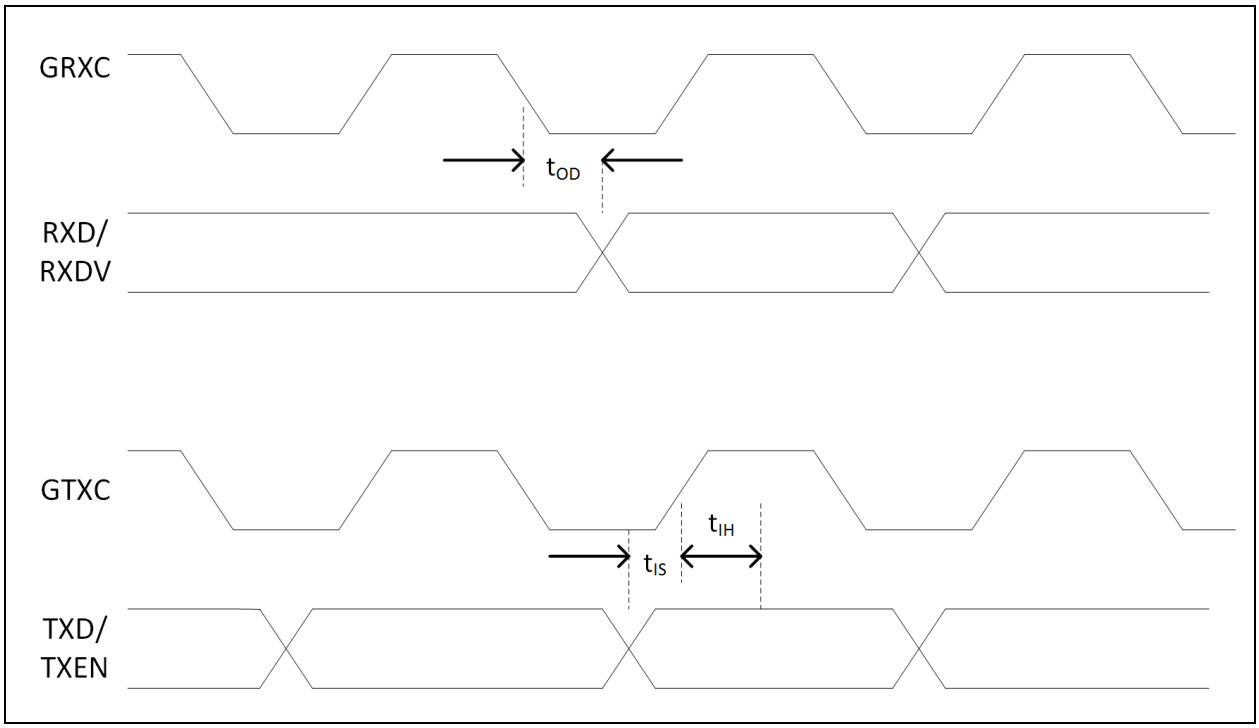

TABLE 7-1: GMII TIMING PARAMETERS

Symbol	Parameter	Min.	Typ.	Max.	Units
—	Clock Cycle	—	8	—	ns
t_{IS}	Set-Up Time	1.2	—	—	
t_{IH}	Hold Time	1.2	—	—	
t_{OD}	Output Delay Respect to Clock Falling Edge	—	—	1	

© 2016-2017 Microchip Technology Inc.

FIGURE 7-2: RGMII V2.0 SPECIFICATION

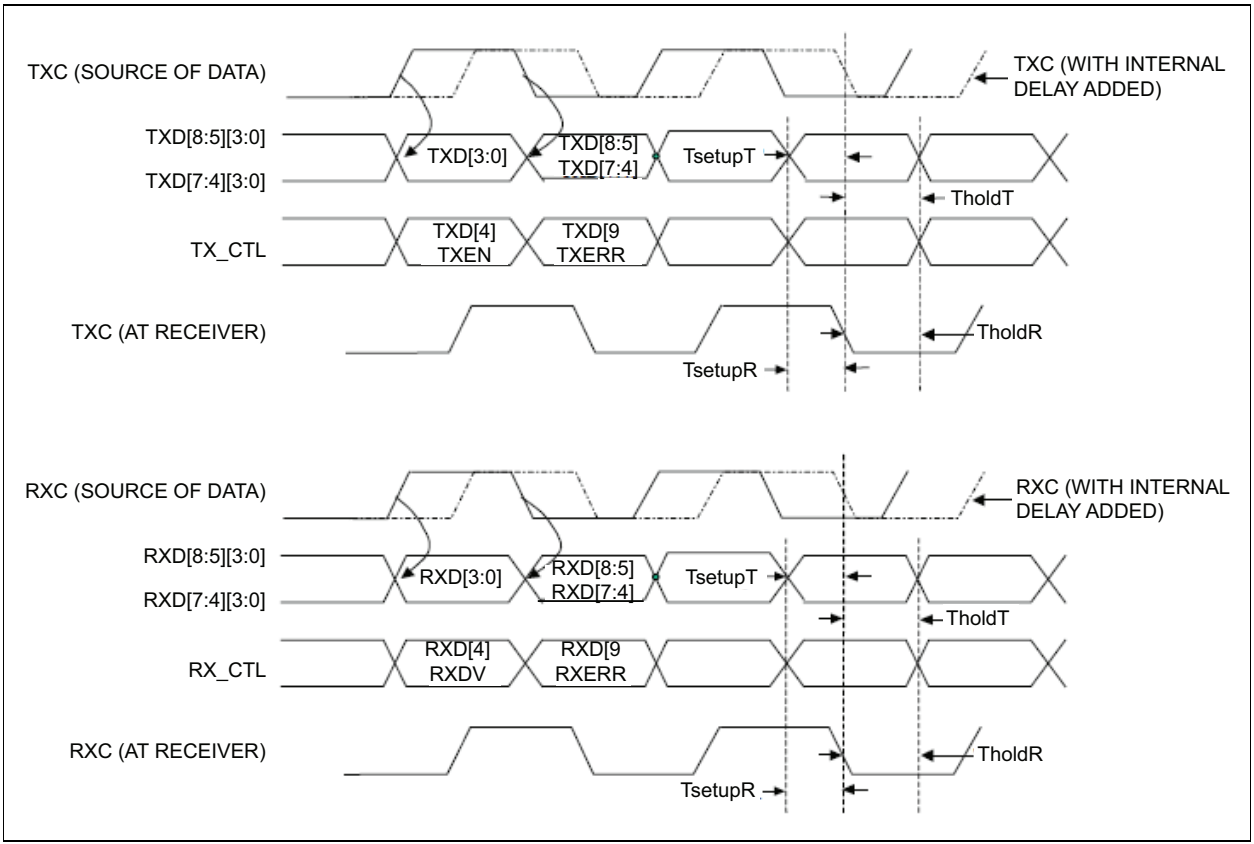

TABLE 7-2: RGMII TIMING PARAMETERS

Symbol	Parameter	Min.	Typ.	Max.	Units
TskewT	Data to clock output skew (at transmitter) (Note 7-1)	–500	0	500	ps
TskewR	Data to clock input skew (at receiver) (Note 7-1)	1	—	2.6	ns
TsetupT	Data to clock output setup (at transmitter – integrated delay)	1.0	2.0	—	
TholdT	Clock to data output hold (at transmitter – integrated delay)	1.0	2.0	—	
TsetupR	Data to clock input setup (at receiver – integrated delay)	0.8	2.0	—	
TholdR	Clock to data input hold (at receiver – integrated delay)	0.8	2.0	—	
Tcyc	Clock Cycle Duration (Note 7-2)	7.2	8.0	8.8	
Duty_G	Duty Cycle for Gigabit	45	50	55	%
Duty_T	Duty Cycle for 10/100T	40	50	60	
t_r/t_f	Rise/Fall Time (20-80%)	—	—	0.75	ns

Note 7-1 RGMII v2.0 add Internal Delay (RGMII-ID) option to match the data to clock output/input skew for RGMII transmit and receiving, see the register 86 bits[4:3] for detail.

Note 7-2 For 10 Mbps and 100 Mbps. Tcyc will scale to 400 ns ±40 ns and 40 ns ±4 ns.

FIGURE 7-3: MAC MODE MII TIMING - DATA RECEIVED FROM MII

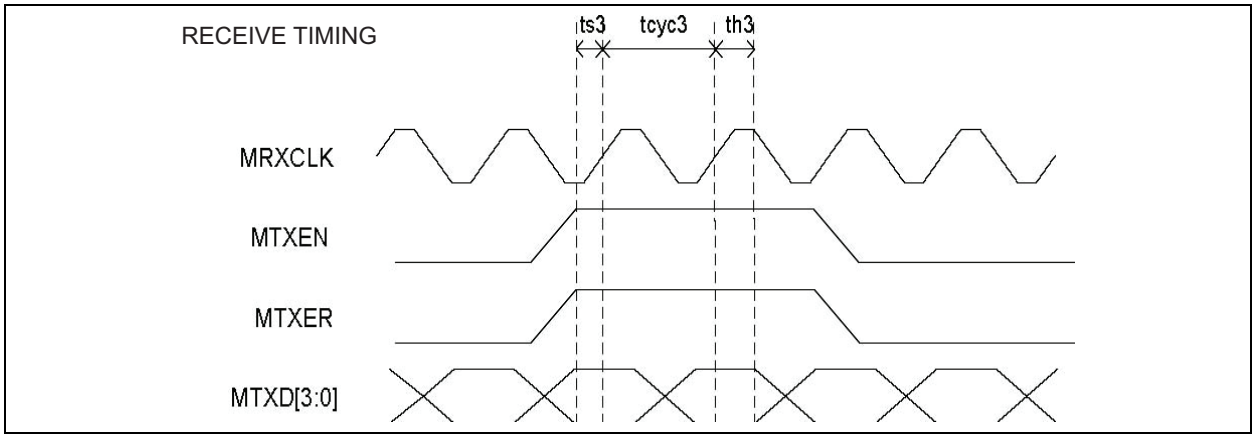

FIGURE 7-4: MAC MODE MII TIMING - DATA TRANSMITTED FROM MII

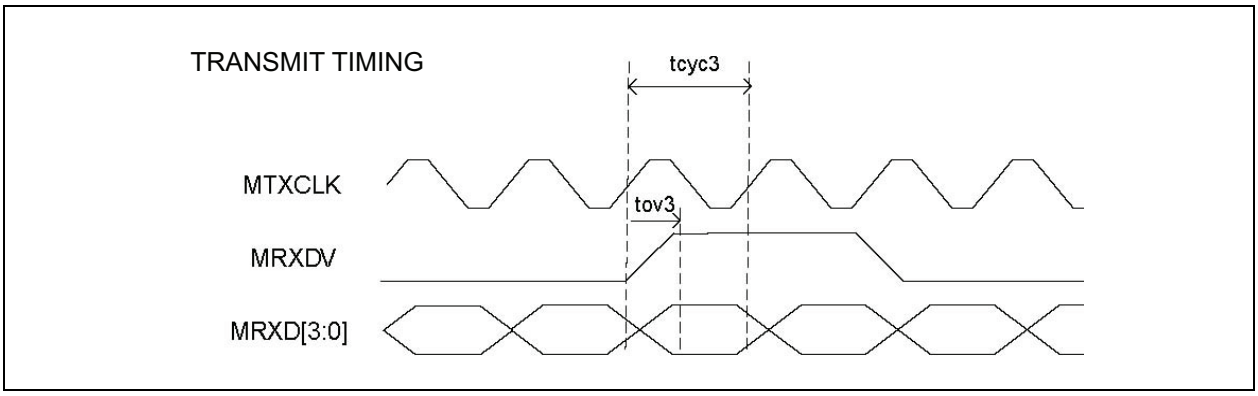

TABLE 7-3: MAC MODE MII TIMING PARAMETERS

Symbol	Parameter	10BASE-T/100BASE-TX			
		Min.	Typ.	Max.	Units
t_{cyc3}	Clock Cycle	—	400/ 40	—	ns
t_{s3}	Set-Up Time	2	—	—	
t_{h3}	Hold Time	2	—	—	
t_{ov3}	Output Valid	3	8	10	

© 2016-2017 Microchip Technology Inc.

FIGURE 7-5: PHY MODE MII TIMING - DATA RECEIVED FROM MII

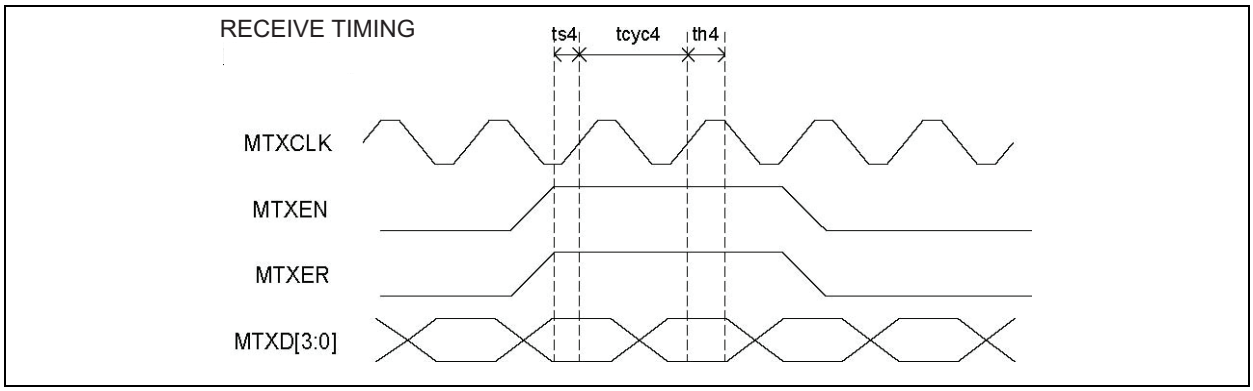

FIGURE 7-6: PHY MODE MII TIMING - DATA TRANSMITTED FROM MII

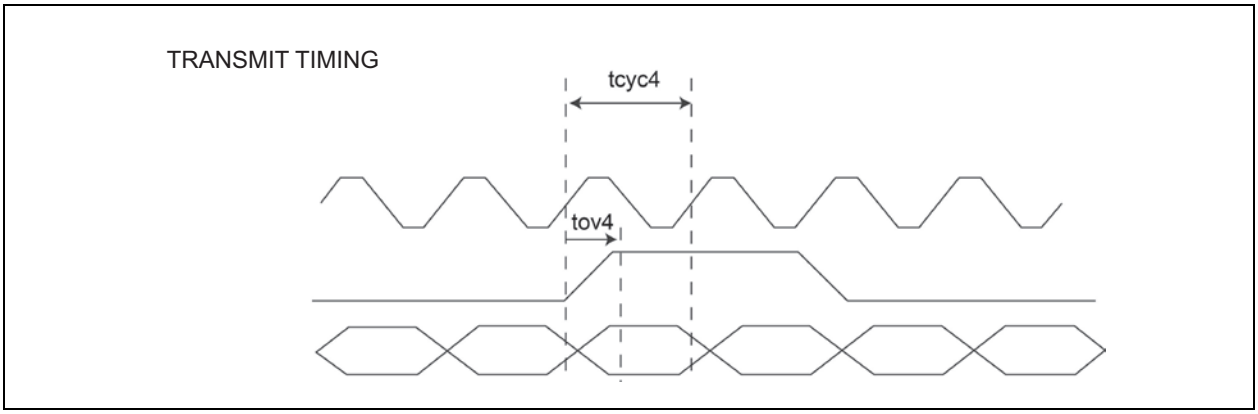

TABLE 7-4: PHY MODE MII TIMING PARAMETERS

Symbol	Parameter	10BASET/100BASET			
		Min.	Typ.	Max.	Units
t_{cyc4}	Clock Cycle	—	400/40	—	ns
t_{s4}	Set-Up Time	10	—	—	
t_{h4}	Hold Time	0	—	—	
t_{ov4}	Output Valid	16	20	25	

FIGURE 7-7: RMII TIMING - DATA RECEIVED FROM RMII

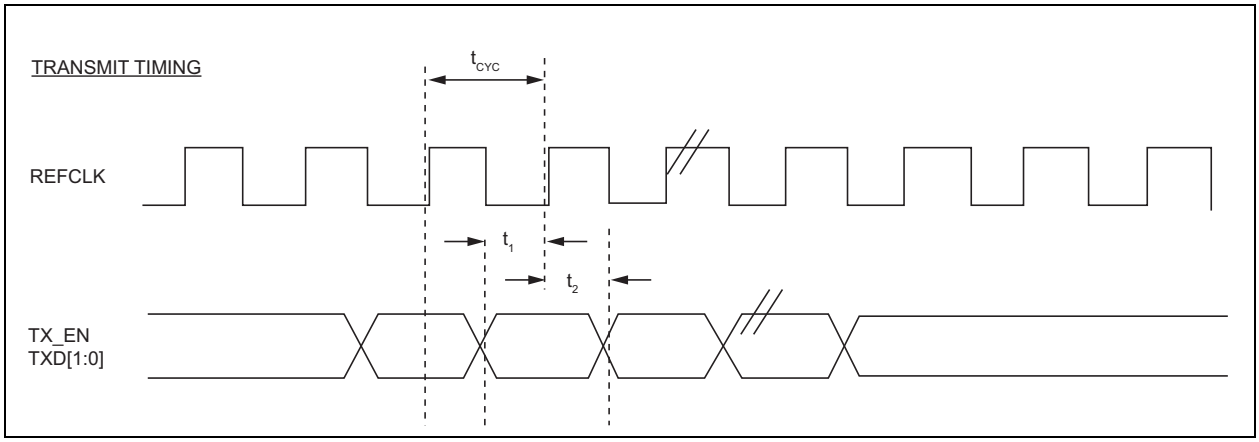

FIGURE 7-8: RMII TIMING - DATA TRANSMITTED FROM RMII

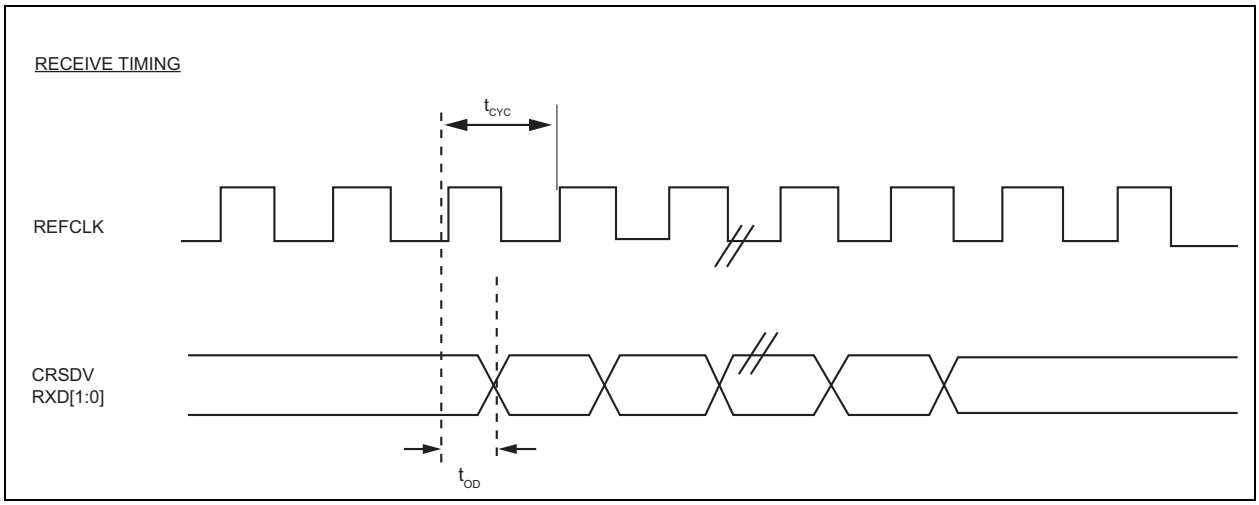

TABLE 7-5: RMII TIMING PARAMETERS

Symbol	Parameter	Min.	Typ.	Max.	Units
t_{cyc}	Clock Cycle	—	20	—	ns
t_1	Set-Up Time	4	—	—	
t_2	Hold Time	2	—	—	
t_{od}	Output Delay	3	—	10	

© 2016-2017 Microchip Technology Inc.

FIGURE 7-9: SPI INPUT TIMING

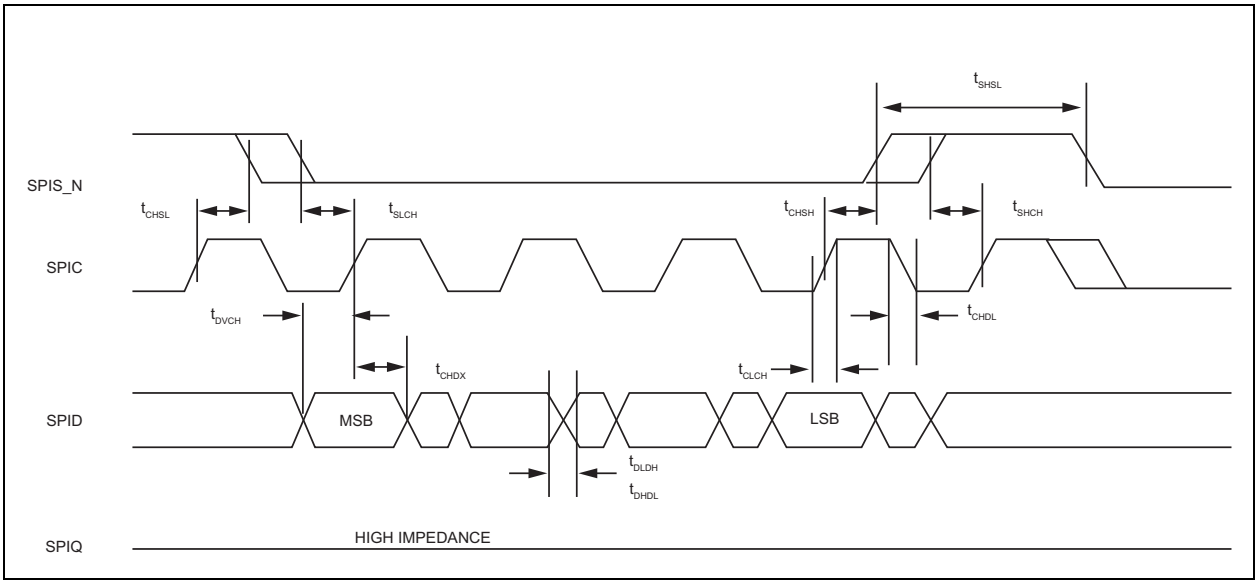

TABLE 7-6: SPI INPUT TIMING PARAMETERS

Symbol	Parameter	Min.	Typ.	Max.	Units
f_C	Clock Frequency	—	—	50	MHz
t_{CHSL}	SPIS_N Inactive Hold Time	2	—	—	ns
t_{SLCH}	SPIS_N Active Set-Up Time	4	—	—	
t_{CHSH}	SPIS_N Active Hold Time	2	—	—	
t_{SHCH}	SPIS_N Inactive Set-Up Time	4	—	—	
t_{SHSL}	SPIS_N Deselect Time	10	—	—	
t_{DVCH}	Data Input Set-Up Time	4	—	—	
t_{CHDX}	Data Input Hold Time	2	—	—	
t_{CLCH}	Clock Rise Time	—	—	1	µs
t_{CHCL}	Clock Fall Time	—	—	1	
t_{DLDH}	Data Input Rise Time	—	—	1	
t_{DHDL}	Data Input Fall Time	—	—	1	

FIGURE 7-10: SPI OUTPUT TIMING

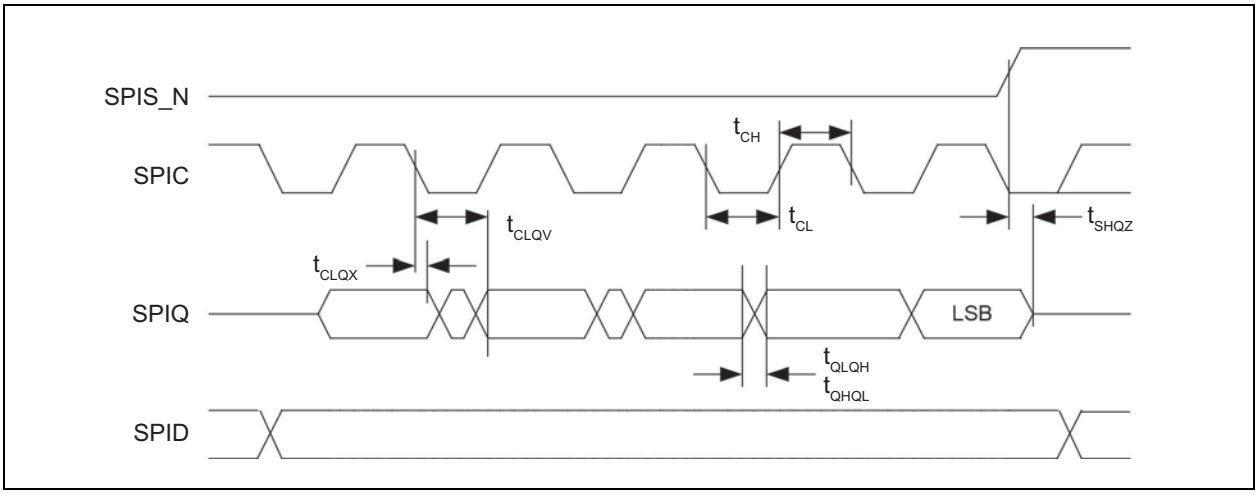

TABLE 7-7: SPI OUTPUT TIMING PARAMETERS

Symbol	Parameter	Min.	Typ.	Max.	Units
f_C	Clock Frequency	—	—	50	MHz
t_{CLQX}	SPIQ Hold Time	0	—	0	ns
t_{CLQV}	Clock to Low SPIQ Valid	—	—	60	
t_{CH}	Clock High Time	9	—	—	
t_{CL}	Clock Low Time	9	—	—	
t_{QLQH}	SPIQ Rise Time	—	—	50	
t_{QHQL}	SPIQ Fall Time	—	—	50	
t_{SHQZ}	SPIQ Disable Time	—	—	15	

© 2016-2017 Microchip Technology Inc.

FIGURE 7-11: AUTO-NEGOTIATION TIMING

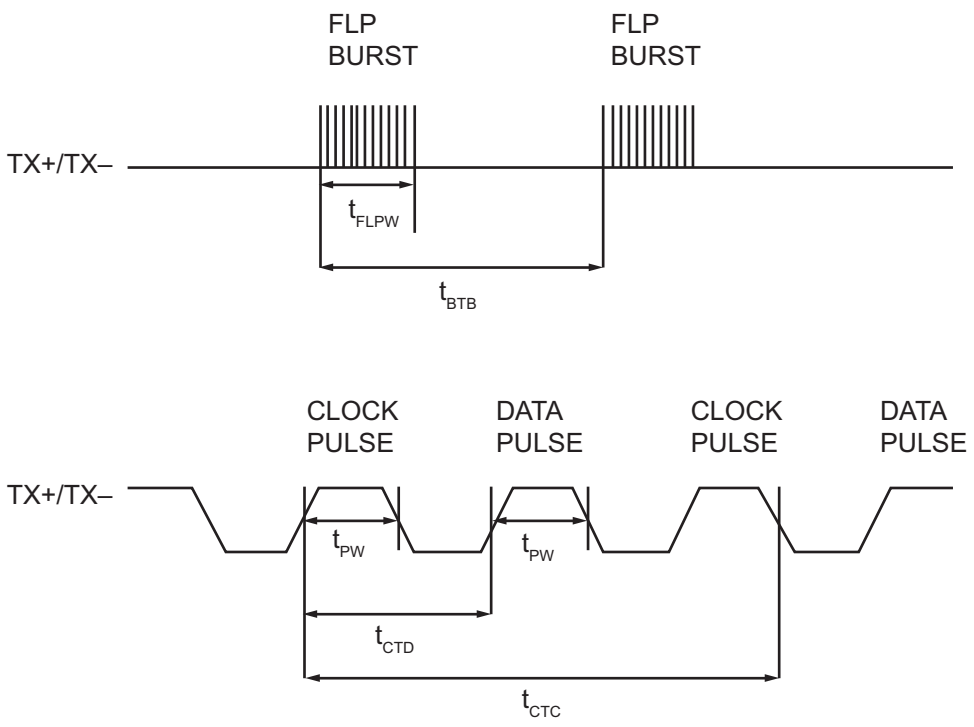

TABLE 7-8: AUTO-NEGOTIATION TIMING PARAMETERS

Symbol	Parameter	Min.	Typ.	Max.	Units
t_{BTB}	FLP Burst to FLP Burst	8	16	24	ms
t_{FLPW}	FLP Burst Width	—	2	—	
t_{PW}	Clock/Data Pulse Width	—	100	—	ns
t_{CTD}	Clock Pulse to Data Pulse	55.5	64	69.5	µs
t_{CTC}	Clock Pulse to Clock Pulse	111	128	139	
—	Number of Clock/Data Pulses per Burst	17	—	33	—

FIGURE 7-12: MDC/MDIO TIMING

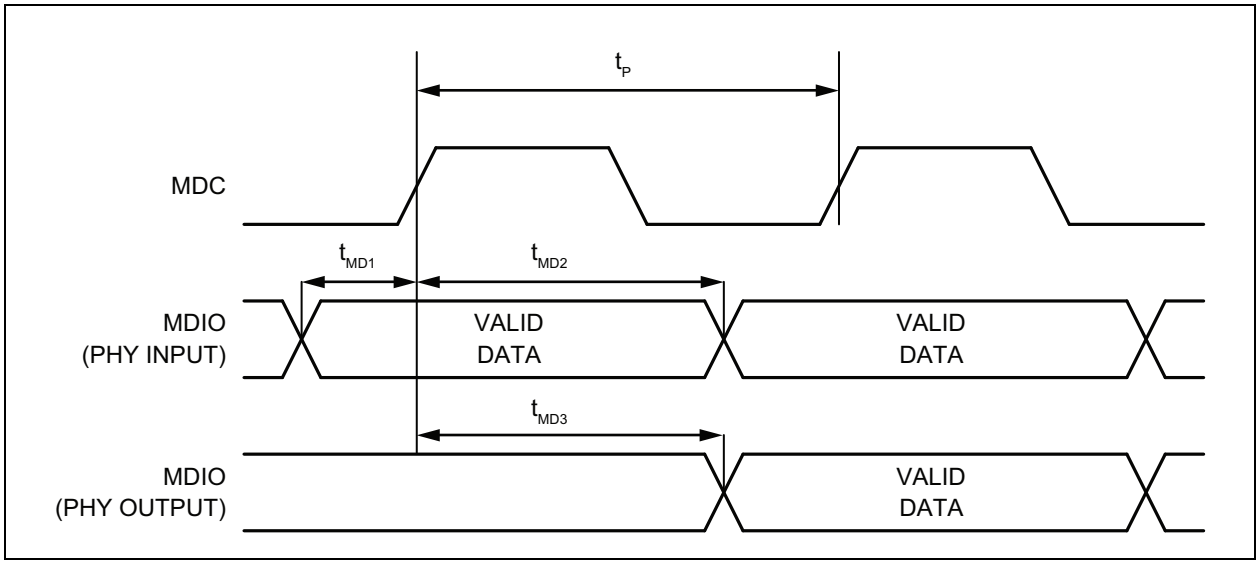

TABLE 7-9: MDC/MDIO TYPICAL TIMING PARAMETERS

Symbol	Parameter	Min.	Typ.	Max.	Units
f_C	Clock Frequency	—	2.5	25	MHz
t_P	MDC Period	—	400	—	ns
t_{MD1}	MDIO (PHY Input) Set-Up to Rising Edge of MDC	10	—	—	
t_{MD2}	MDIO (PHY Input) Hold from Rising Edge of MDC	4	—	—	
t_{MD3}	MDIO (PHY Output) Delay from Rising Edge of MDC	5	222	—	

© 2016-2017 Microchip Technology Inc.

FIGURE 7-13: POWER-DOWN/POWER-UP AND RESET TIMING

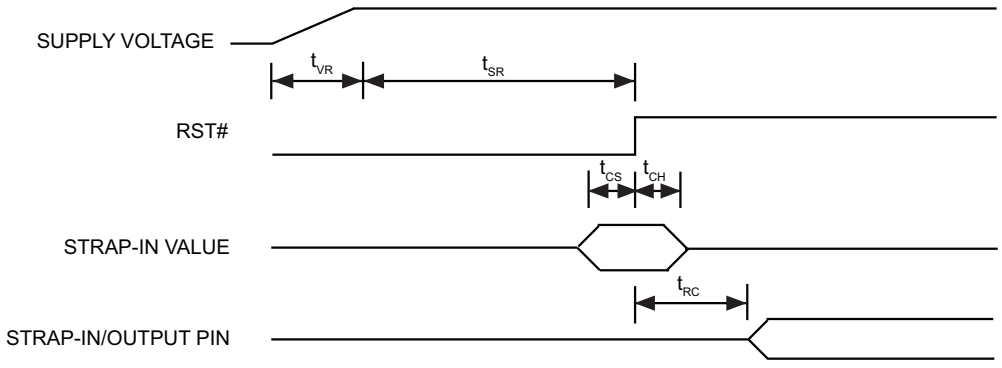

TABLE 7-10: RESET TIMING PARAMETERS

Symbol	Parameter	Min.	Typ.	Max.	Units
t_{SR}	Stable Supply Voltages to Reset High	10	—	—	ms
t_{CS}	Configuration Set-Up Time	5	—	—	ns
t_{CH}	Configuration Hold Time	5	—	—	
t_{RC}	Reset to Strap-In Pin Output	6	—	—	
t_{VR}	3.3V Rise Time	200	—	—	µs

8.0 RESET CIRCUIT

The following discrete reset circuit, shown in Figure 8-1, is recommended when powering up the KSZ8795 device. For an application where the reset circuit signal comes from another device (e.g., CPU, FPGA, etc.), the reset circuit as shown in Figure 8-2 is recommended.

FIGURE 8-1: RECOMMENDED RESET CIRCUIT

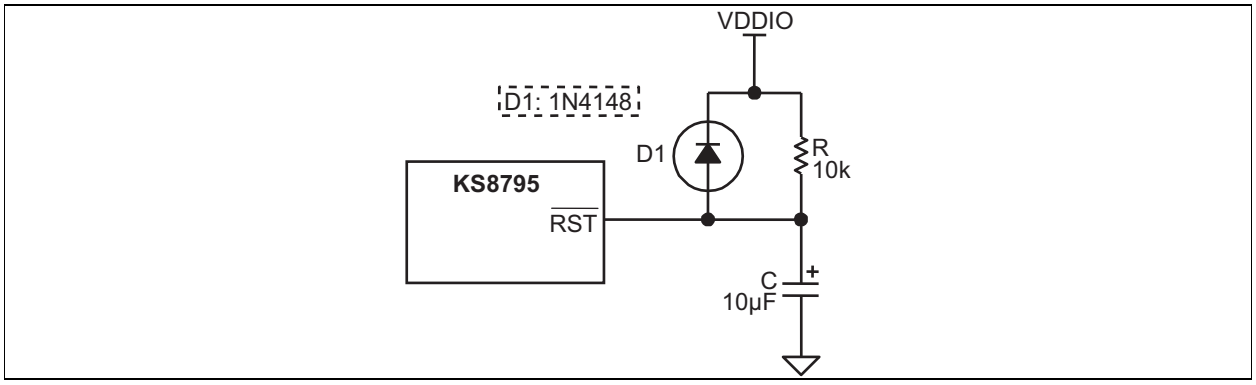

FIGURE 8-2: RECOMMENDED CIRCUIT FOR INTERFACING WITH CPU/FPGA RESET

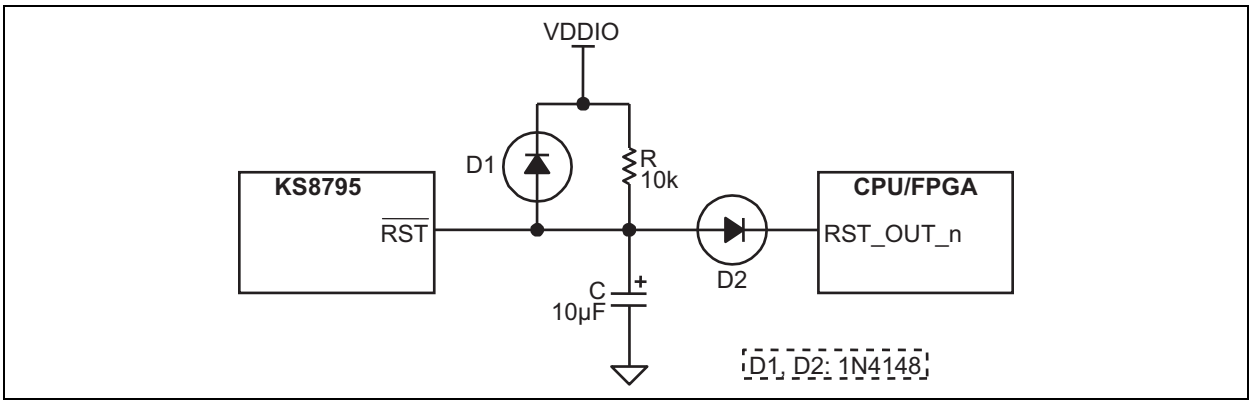

Figure 8-2 shows a reset circuit recommended for applications where reset is driven by another device (for example, the CPU or an FPGA). The reset out RST_OUT_n from CPU/FPGA provides the warm reset after power up reset. D2 is required if using different V_{DDIO} voltage between switch and CPU/FPGA. Diode D2 should be selected to provide maximum 0.3V VF (Forward Voltage), for example, VISHAY BAT54, MSS1P2L. Alternatively, a level shifter device can also be used. D2 is not required if switch and CPU/FPGA use same V_{DDIO} voltage.

© 2016-2017 Microchip Technology Inc.

9.0 SELECTION OF ISOLATION TRANSFORMER

One simple 1:1 isolation transformer is needed at the line interface. An isolation transformer with integrated common-mode choke is recommended for exceeding FCC requirements at line side. Request to separate the center taps of RX/TX at chip side. The IEEE 802.3u standard for 100BASE-TX assumes a transformer loss of 0.5 dB. For the transmit line transformer, insertion loss of up to 1.3 dB can be compensated by increasing the line drive current by means of reducing the ISET resistor value. Table 9-1 gives recommended transformer characteristics.

TABLE 9-1: 25 MHZ CRYSTAL/REFERENCE CLOCK SELECTION CRITERIA

Characteristics	Value	Test Condition
Turns Ratio	1 CT : 1 CT	—
Open-Circuit Inductance (min.)	350 µH	100 mV, 100 kHz, 8 mA
Insertion Loss (max.)	1.1 dB	0.1 MHz to 100 MHz
HIPOT (min.)	1500 V_{RMS}	—

Table 9-2 lists the transformer vendors that provide compatible magnetic parts for this device.

TABLE 9-2: QUALIFIED MAGNETIC VENDORS

Vendors and Parts		Auto MDIX	Number of Ports	Vendors and Parts		Auto MDIX	Number of Ports
Pulse	H1164NL	Yes	4	Pulse	H1102	Yes	1
YCL	PH406082	Yes	4	Bel Fuse	S558-5999-U7	Yes	1
TDK	TLA-6T718A	Yes	1	YCL	PT163020	Yes	1
LanKom	LF-H41S	Yes	1	Transpower	HB726	Yes	1
Datatronic	NT79075	Yes	1	Delta	LF8505	Yes	1

10.0 SELECTION OF REFERENCE CRYSTAL

Table 10-1 lists the typical reference crystal characteristics for this device.

TABLE 10-1: TYPICAL REFERENCE CRYSTAL CHARACTERISTICS

Characteristics	Value
Frequency	25.00000 MHz
Frequency Tolerance (max.)	≤ ±50 ppm
Load Capacitance (max.) (Note 10-1)	27 pF
Series Resistance (max. ESR)	40Ω

Note 10-1 Typical value varies per specific crystal specs.

11.0 PACKAGE OUTLINES

Note: For the most current package drawings, please see the Microchip Packaging Specification located at http://www.microchip.com/packaging

FIGURE 11-1: 80-LEAD 10 MM X 10 MM LQFP

TITLE
80 LEAD LQFP 10x10mm PACKAGE OUTLINE & RECOMMENDED LAND PATTERN

DRAWING #	LQFP10x10-80LD-PL-1	UNIT	MM

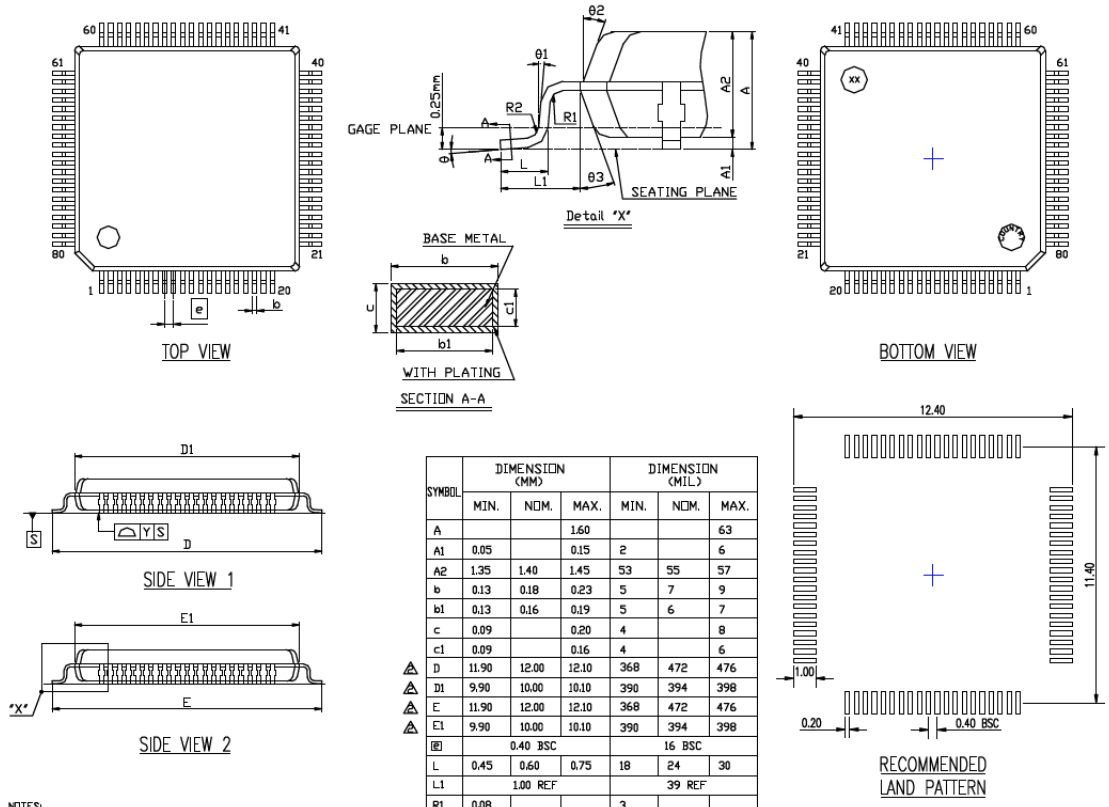

SYMBOL	DIMENSION (MM) MIN.	NOM.	MAX.	DIMENSION (MIL) MIN.	NOM.	MAX.
A			1.60			63
A1	0.05		0.15	2		6
A2	1.35	1.40	1.45	53	55	57
b	0.13	0.18	0.23	5	7	9
b1	0.13	0.16	0.19	5	6	7
c	0.09		0.20	4		8
c1	0.09		0.16	4		6
D	11.90	12.00	12.10	368	472	476
D1	9.90	10.00	10.10	390	394	398
E	11.90	12.00	12.10	368	472	476
E1	9.90	10.00	10.10	390	394	398
e	0.40 BSC			16 BSC		
L	0.45	0.60	0.75	18	24	30
L1	1.00 REF			39 REF		
R1	0.08			3		
R2	0.08		0.20	3		8
Y			0.08			3
θ	0°	3.5°	7°	0°	3.5°	7°
θ1	0°			0°		
θ2	11°	12°	13°	11°	12°	13°
θ3	11°	12°	13°	11°	12°	13°

NOTES:
1. REFER TO JEDEC MS-026 (ISSUE D) / BCE
2. DIMENSION D1 AND E1 DO NOT INCLUDE MOLD PROTRUSION. ALLOWABLE PROTRUSION IS 0.25mm PER SIDE D1 AND E1 ARE MAXIMUM PLASTIC BODY SIZE DIMENSION INCLUDING MOLD MISMATCH.
3. DIMENSION b DOES NOT INCLUDE DAMBAR PROTRUSION. ALLOWABLE DAMBAR PROTRUSION SHALL NOT CAUSE THE LEAD WIDTH TO EXCEED THE MAXIMUM b DIMENSION BY MORE THAN 0.08mm.
4. ALL DIMENSIONS IN MILLIMETERS.

© 2016-2017 Microchip Technology Inc.

APPENDIX A: DATA SHEET REVISION HISTORY

TABLE A-1: REVISION HISTORY

Revision	Section/Figure/Entry	Correction
DS00002112B (01-05-17)	All	Sales listing and cover pages updated. Minor text changes throughout.
	Table 3-8, “Port 5 SW5-MII Connection,” on page 31	Updated right-most column header to be “MAC-to-PHY Connection KSZ8795CLX SW5-MII MAC Mode.”
	Table 3-9, “Port 5 SW5-GMII Connection,” on page 31	Updated incorrect External GMAC column values.
	Table 4-6, “Advanced control Registers 110 - 111,” on page 64	Updated the register 110 (0x6E) bits [7:5] to 101 = Reserved.
DS00002112A (03-28-16)	—	Converted Micrel data sheet KSZ8795CLX to Microchip DS00002112A. Minor text changes throughout.
	Section 4.0, "Device Registers," on page 47	Updated various port register descriptions.
	GMII and RGMII Diagrams	Updated images and associated table parameters.

THE MICROCHIP WEB SITE

Microchip provides online support via our WWW site at www.microchip.com. This web site is used as a means to make files and information easily available to customers. Accessible by using your favorite Internet browser, the web site contains the following information:

- **Product Support** – Data sheets and errata, application notes and sample programs, design resources, user's guides and hardware support documents, latest software releases and archived software
- **General Technical Support** – Frequently Asked Questions (FAQ), technical support requests, online discussion groups, Microchip consultant program member listing
- **Business of Microchip** – Product selector and ordering guides, latest Microchip press releases, listing of seminars and events, listings of Microchip sales offices, distributors and factory representatives

CUSTOMER CHANGE NOTIFICATION SERVICE

Microchip's customer notification service helps keep customers current on Microchip products. Subscribers will receive e-mail notification whenever there are changes, updates, revisions or errata related to a specified product family or development tool of interest.

To register, access the Microchip web site at www.microchip.com. Under "Support", click on "Customer Change Notification" and follow the registration instructions.

CUSTOMER SUPPORT

Users of Microchip products can receive assistance through several channels:

- Distributor or Representative
- Local Sales Office
- Field Application Engineer (FAE)
- Technical Support

Customers should contact their distributor, representative or Field Application Engineer (FAE) for support. Local sales offices are also available to help customers. A listing of sales offices and locations is included in the back of this document.

Technical support is available through the web site at: http://microchip.com/support

© 2016-2017 Microchip Technology Inc.

PRODUCT IDENTIFICATION SYSTEM

To order or obtain information, e.g., on pricing or delivery, refer to the factory or the listed sales office.

PART NO. X X X X X

Device | Interface | Package | Special Attribute | Temperature | Bond Wire

Device:	KSZ8795 - Integrated 5-Port, 10/100 Managed Ethernet Switch with Gigabit GMII/RGMII and MII/RMII Interfaces
Interface:	C = Configurable
Package:	L = 80-pin LQFP
Special Attribute:	X = None
Temperature:	C = 0°C to +70°C (Commercial) I = –40°C to +85°C (Industrial)
Bond Wire:	C = Copper

Examples:

a) KSZ8795CLXCC
Configurable Interface
80-pin LQFP
Commercial Temperature
Copper Wire Bonding

b) KSZ8795CLXIC
Configurable Interface
80-pin LQFP
Industrial Temperature
Copper Wire Bonding

NOTES:

© 2016-2017 Microchip Technology Inc.

Note the following details of the code protection feature on Microchip devices:

- Microchip products meet the specification contained in their particular Microchip Data Sheet.
- Microchip believes that its family of products is one of the most secure families of its kind on the market today, when used in the intended manner and under normal conditions.
- There are dishonest and possibly illegal methods used to breach the code protection feature. All of these methods, to our knowledge, require using the Microchip products in a manner outside the operating specifications contained in Microchip's Data Sheets. Most likely, the person doing so is engaged in theft of intellectual property.
- Microchip is willing to work with the customer who is concerned about the integrity of their code.
- Neither Microchip nor any other semiconductor manufacturer can guarantee the security of their code. Code protection does not mean that we are guaranteeing the product as "unbreakable."

Code protection is constantly evolving. We at Microchip are committed to continuously improving the code protection features of our products. Attempts to break Microchip's code protection feature may be a violation of the Digital Millennium Copyright Act. If such acts allow unauthorized access to your software or other copyrighted work, you may have a right to sue for relief under that Act.

Information contained in this publication regarding device applications and the like is provided only for your convenience and may be superseded by updates. It is your responsibility to ensure that your application meets with your specifications. MICROCHIP MAKES NO REPRESENTATIONS OR WARRANTIES OF ANY KIND WHETHER EXPRESS OR IMPLIED, WRITTEN OR ORAL, STATUTORY OR OTHERWISE, RELATED TO THE INFORMATION, INCLUDING BUT NOT LIMITED TO ITS CONDITION, QUALITY, PERFORMANCE, MERCHANTABILITY OR FITNESS FOR PURPOSE**.** Microchip disclaims all liability arising from this information and its use. Use of Microchip devices in life support and/or safety applications is entirely at the buyer's risk, and the buyer agrees to defend, indemnify and hold harmless Microchip from any and all damages, claims, suits, or expenses resulting from such use. No licenses are conveyed, implicitly or otherwise, under any Microchip intellectual property rights unless otherwise stated.

Trademarks

The Microchip name and logo, the Microchip logo, AnyRate, AVR, AVR logo, AVR Freaks, BeaconThings, BitCloud, CryptoMemory, CryptoRF, dsPIC, FlashFlex, flexPWR, Heldo, JukeBlox, KEELOQ, KEELOQ logo, Kleer, LANCheck, LINK MD, maXStylus, maXTouch, MediaLB, megaAVR, MOST, MOST logo, MPLAB, OptoLyzer, PIC, picoPower, PICSTART, PIC32 logo, Prochip Designer, QTouch, RightTouch, SAM-BA, SpyNIC, SST, SST Logo, SuperFlash, tinyAVR, UNI/O, and XMEGA are registered trademarks of Microchip Technology Incorporated in the U.S.A. and other countries.

ClockWorks, The Embedded Control Solutions Company, EtherSynch, Hyper Speed Control, HyperLight Load, IntelliMOS, mTouch, Precision Edge, and Quiet-Wire are registered trademarks of Microchip Technology Incorporated in the U.S.A.

Adjacent Key Suppression, AKS, Analog-for-the-Digital Age, Any Capacitor, AnyIn, AnyOut, BodyCom, chipKIT, chipKIT logo, CodeGuard, CryptoAuthentication, CryptoCompanion, CryptoController, dsPICDEM, dsPICDEM.net, Dynamic Average Matching, DAM, ECAN, EtherGREEN, In-Circuit Serial Programming, ICSP, Inter-Chip Connectivity, JitterBlocker, KleerNet, KleerNet logo, Mindi, MiWi, motorBench, MPASM, MPF, MPLAB Certified logo, MPLIB, MPLINK, MultiTRAK, NetDetach, Omniscient Code Generation, PICDEM, PICDEM.net, PICkit, PICtail, PureSilicon, QMatrix, RightTouch logo, REAL ICE, Ripple Blocker, SAM-ICE, Serial Quad I/O, SMART-I.S., SQI, SuperSwitcher, SuperSwitcher II, Total Endurance, TSHARC, USBCheck, VariSense, ViewSpan, WiperLock, Wireless DNA, and ZENA are trademarks of Microchip Technology Incorporated in the U.S.A. and other countries.

SQTP is a service mark of Microchip Technology Incorporated in the U.S.A.

Silicon Storage Technology is a registered trademark of Microchip Technology Inc. in other countries.

GestIC is a registered trademark of Microchip Technology Germany II GmbH & Co. KG, a subsidiary of Microchip Technology Inc., in other countries.

All other trademarks mentioned herein are property of their respective companies.

© 2016-2017, Microchip Technology Incorporated, All Rights Reserved.

ISBN: 978-1-5224-1262-5

QUALITY MANAGEMENT SYSTEM
CERTIFIED BY DNV
= ISO/TS 16949 =

Microchip received ISO/TS-16949:2009 certification for its worldwide headquarters, design and wafer fabrication facilities in Chandler and Tempe, Arizona; Gresham, Oregon and design centers in California and India. The Company's quality system processes and procedures are for its PIC® MCUs and dsPIC® DSCs, KEELOQ® code hopping devices, Serial EEPROMs, microperipherals, nonvolatile memory and analog products. In addition, Microchip's quality system for the design and manufacture of development systems is ISO 9001:2000 certified.

Worldwide Sales and Service

AMERICAS

Corporate Office
2355 West Chandler Blvd.
Chandler, AZ 85224-6199
Tel: 480-792-7200
Fax: 480-792-7277
Technical Support:
http://www.microchip.com/support
Web Address:
www.microchip.com

Atlanta
Duluth, GA
Tel: 678-957-9614
Fax: 678-957-1455

Austin, TX
Tel: 512-257-3370

Boston
Westborough, MA
Tel: 774-760-0087
Fax: 774-760-0088

Chicago
Itasca, IL
Tel: 630-285-0071
Fax: 630-285-0075

Dallas
Addison, TX
Tel: 972-818-7423
Fax: 972-818-2924

Detroit
Novi, MI
Tel: 248-848-4000

Houston, TX
Tel: 281-894-5983

Indianapolis
Noblesville, IN
Tel: 317-773-8323
Fax: 317-773-5453
Tel: 317-536-2380

Los Angeles
Mission Viejo, CA
Tel: 949-462-9523
Fax: 949-462-9608
Tel: 951-273-7800

Raleigh, NC
Tel: 919-844-7510

New York, NY
Tel: 631-435-6000

San Jose, CA
Tel: 408-735-9110
Tel: 408-436-4270

Canada - Toronto
Tel: 905-695-1980
Fax: 905-695-2078

ASIA/PACIFIC

Asia Pacific Office
Suites 3707-14, 37th Floor
Tower 6, The Gateway
Harbour City, Kowloon

Hong Kong
Tel: 852-2943-5100
Fax: 852-2401-3431

Australia - Sydney
Tel: 61-2-9868-6733
Fax: 61-2-9868-6755

China - Beijing
Tel: 86-10-8569-7000
Fax: 86-10-8528-2104

China - Chengdu
Tel: 86-28-8665-5511
Fax: 86-28-8665-7889

China - Chongqing
Tel: 86-23-8980-9588
Fax: 86-23-8980-9500

China - Dongguan
Tel: 86-769-8702-9880

China - Guangzhou
Tel: 86-20-8755-8029

China - Hangzhou
Tel: 86-571-8792-8115
Fax: 86-571-8792-8116

China - Hong Kong SAR
Tel: 852-2943-5100
Fax: 852-2401-3431

China - Nanjing
Tel: 86-25-8473-2460
Fax: 86-25-8473-2470

China - Qingdao
Tel: 86-532-8502-7355
Fax: 86-532-8502-7205

China - Shanghai
Tel: 86-21-3326-8000
Fax: 86-21-3326-8021

China - Shenyang
Tel: 86-24-2334-2829
Fax: 86-24-2334-2393

China - Shenzhen
Tel: 86-755-8864-2200
Fax: 86-755-8203-1760

China - Wuhan
Tel: 86-27-5980-5300
Fax: 86-27-5980-5118

China - Xian
Tel: 86-29-8833-7252
Fax: 86-29-8833-7256

ASIA/PACIFIC

China - Xiamen
Tel: 86-592-2388138
Fax: 86-592-2388130

China - Zhuhai
Tel: 86-756-3210040
Fax: 86-756-3210049

India - Bangalore
Tel: 91-80-3090-4444
Fax: 91-80-3090-4123

India - New Delhi
Tel: 91-11-4160-8631
Fax: 91-11-4160-8632

India - Pune
Tel: 91-20-3019-1500

Japan - Osaka
Tel: 81-6-6152-7160
Fax: 81-6-6152-9310

Japan - Tokyo
Tel: 81-3-6880- 3770
Fax: 81-3-6880-3771

Korea - Daegu
Tel: 82-53-744-4301
Fax: 82-53-744-4302

Korea - Seoul
Tel: 82-2-554-7200
Fax: 82-2-558-5932 or
82-2-558-5934

Malaysia - Kuala Lumpur
Tel: 60-3-6201-9857
Fax: 60-3-6201-9859

Malaysia - Penang
Tel: 60-4-227-8870
Fax: 60-4-227-4068

Philippines - Manila
Tel: 63-2-634-9065
Fax: 63-2-634-9069

Singapore
Tel: 65-6334-8870
Fax: 65-6334-8850

Taiwan - Hsin Chu
Tel: 886-3-5778-366
Fax: 886-3-5770-955

Taiwan - Kaohsiung
Tel: 886-7-213-7830

Taiwan - Taipei
Tel: 886-2-2508-8600
Fax: 886-2-2508-0102

Thailand - Bangkok
Tel: 66-2-694-1351
Fax: 66-2-694-1350

EUROPE

Austria - Wels
Tel: 43-7242-2244-39
Fax: 43-7242-2244-393

Denmark - Copenhagen
Tel: 45-4450-2828
Fax: 45-4485-2829

Finland - Espoo
Tel: 358-9-4520-820

France - Paris
Tel: 33-1-69-53-63-20
Fax: 33-1-69-30-90-79

France - Saint Cloud
Tel: 33-1-30-60-70-00

Germany - Garching
Tel: 49-8931-9700

Germany - Haan
Tel: 49-2129-3766400

Germany - Heilbronn
Tel: 49-7131-67-3636

Germany - Karlsruhe
Tel: 49-721-625370

Germany - Munich
Tel: 49-89-627-144-0
Fax: 49-89-627-144-44

Germany - Rosenheim
Tel: 49-8031-354-560

Israel - Ra'anana
Tel: 972-9-744-7705

Italy - Milan
Tel: 39-0331-742611
Fax: 39-0331-466781

Italy - Padova
Tel: 39-049-7625286

Netherlands - Drunen
Tel: 31-416-690399
Fax: 31-416-690340

Norway - Trondheim
Tel: 47-7289-7561

Poland - Warsaw
Tel: 48-22-3325737

Romania - Bucharest
Tel: 40-21-407-87-50

Spain - Madrid
Tel: 34-91-708-08-90
Fax: 34-91-708-08-91

Sweden - Gothenberg
Tel: 46-31-704-60-40

Sweden - Stockholm
Tel: 46-8-5090-4654

UK - Wokingham
Tel: 44-118-921-5800
Fax: 44-118-921-5820

© 2016-2017 Microchip Technology Inc.