MICRO SWITCH
FREEPORT ILLINOIS U.S.A.
A DIVISION OF HONEYWELL
FED MFG CODE 91929

SWITCH - TOGGLE FLUSH KEY

CATALOG LISTING
1TP8 SERIES
CHART 1

THIS DRAWING COVERS A PROPRIETARY ITEM AND IS THE PROPERTY OF MICRO SWITCH, A DIVISION OF HONEYWELL. THIS DRAWING IS NOT TO BE COPIED OR USED WITHOUT THE APPROVAL OF MICRO SWITCH.

	CATALOG LISTING	CIRCUIT MADE WITH BUTTON DEPRESSED ON			ELECTRICAL DATA
		LUG SIDE (1-2)	CENTER (1-2)	OPPOSITE LUG (2-3)	
	1TP8-1	ON	OFF	ON	L191 15A 125, 250, 277 VAC; 1/2HP 125 VAC; 1HP 250, 277 VAC; 5A 125 VAC "L"
	1TP8-2	OFF	NONE	ON	
	1TP8-3	ON	NONE	ON	
	1TP8-21	NONE	OFF	ON	
	1TP8-31	NONE	ON	ON	
	1TP8-4	MOM OFF	NONE	ON	L192 10A 125, 250, 277 VAC; 1/4HP 125 VAC, 1/2HP 250, 277 VAC; 3A 125 VAC "L"
	1TP8-5	MOM ON	OFF	ON	
	1TP8-6	MOM ON	NONE	OFF	
	1TP8-7	MOM ON	OFF	MOM ON	
	1TP8-8	MOM ON	NONE	ON	
	1TP8-51	NONE	ON	MOM ON	
	1TP8-61	MOM ON	OFF	NONE	

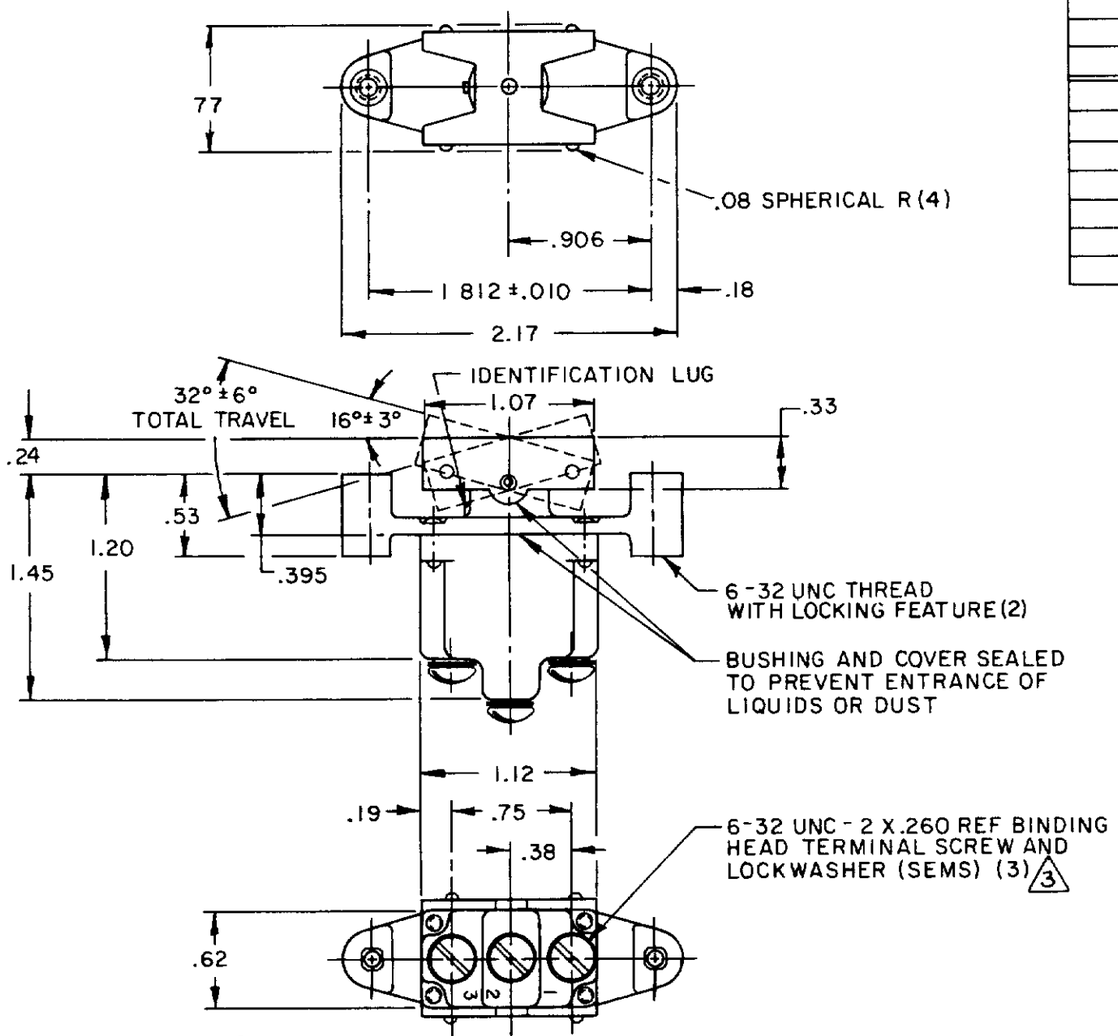

NOTES
1 - MICRO SWITCH CATALOG LISTING MARKED ON SIDE OF SWITCH
2 - THESE SWITCHES WILL WITHSTAND TEMPERATURE OF 160°F
3 - SCREWS FURNISHED UNASSEMBLED

THIRD ANGLE PROJECTION

SCALE FULL

DO NOT SCALE PRINT

TOLERANCES
APPLY TO DESIGN UNITS. CONVERSIONS ARE ONLY FOR REFERENCE. UNLESS NOTED TOLERANCES ARE ±

	DIM mm	TOL. mm/in	DIM in	TOL. mm/in
NO PLACES	X	1/.04		
ONE PLACE	X.X	0.4/.016	X.X	0.8/.03
TWO PLACES	X.XX	0.15/.006	X.XX	0.38/.015
THREE PLACES			X.XXX	0.13/.005
ANGLES				

DESIGN UNITS: SI METRIC ☐ US CUSTOMARY ☒

WEIGHT

1TP8 SERIES CHART 1
PAGE 1 OF 1
RELEASE NO. PR-5907
REPLACES
DRAWING NUMBER
ISSUE 15

REVISIONS

A	CO-51993	KAG 14 SEP 82
B	C056795	JAP 27 MAR 85
C	C057712	TRF 14 NOV 85
D	C059943	JAP 23 JUL 86
E	C077897	TSM 15 JUN 94
F	C094412	DLM 13 OCT 99

DRAWN KAG 14 SEP 82
CHECK 14 SEPT 82
CHECK 1 FEB
CHECK
CHECK

FORMTEK
FO-52854-C