PRODUCT NUMBER ("LF" DENOTES LEAD-FREE)	CONTACT PLATING NOTE	MATING LENGTH, DIM "X"				ROHS COMPATIBILITY
		POSN 1	POSN 2	POSN 3	POSN 4	
10028916-4444P00	2	1.10	1.10	1.10	1.10	N/A
10028916-4444P00LF	3					SEE NOTE 9
10028916-5555P00	2	2.60	2.60	2.60	2.60	N/A
10028916-5555P00LF	3					SEE NOTE 9
10028916-4555P00	2	1.10	2.60	2.60	2.60	N/A
10028916-4555P00LF	3					SEE NOTE 9
10028916-5455P00	2	2.60	1.10	2.60	2.60	N/A
10028916-5455P00LF	3					SEE NOTE 9
10028916-5545P00	2	2.60	2.60	1.10	2.60	N/A
10028916-5545P00LF	3					SEE NOTE 9
10028916-5554P00	2	2.60	2.60	2.60	1.10	N/A
10028916-5554P00LF	3					SEE NOTE 9
10028916-4554P00	2	1.10	2.60	2.60	1.10	N/A
10028916-4554P00LF	3					SEE NOTE 9
10028916-4455P00	2	1.10	1.10	2.60	2.60	N/A
10028916-4455P00LF	3					SEE NOTE 9
10028916-5544P00	2	2.60	2.60	1.10	1.10	N/A
10028916-5544P00LF	3					SEE NOTE 9

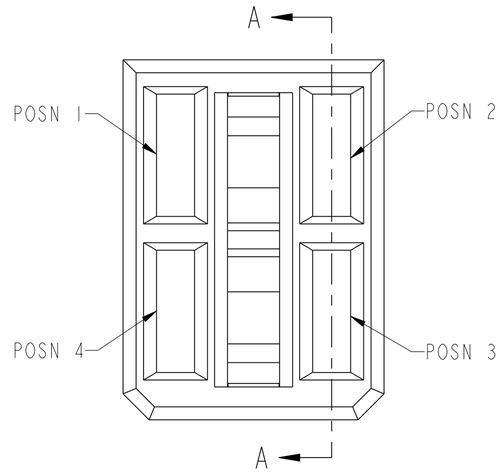

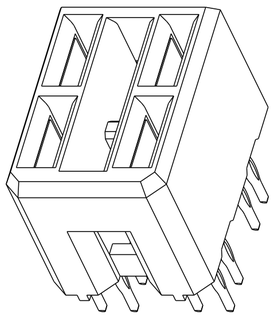

SCALE 4:1

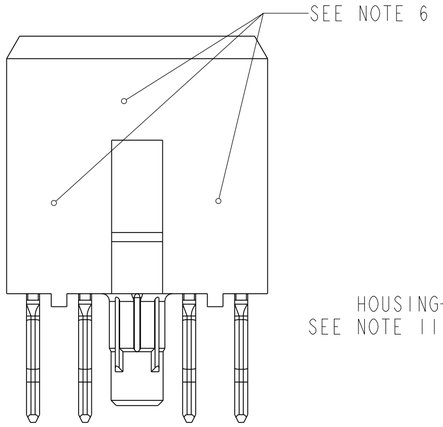

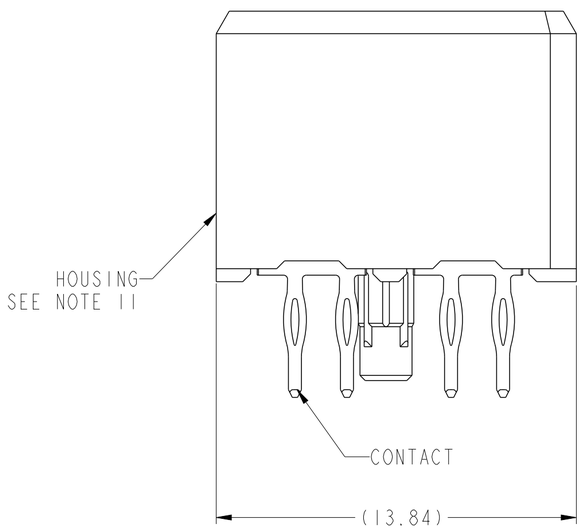

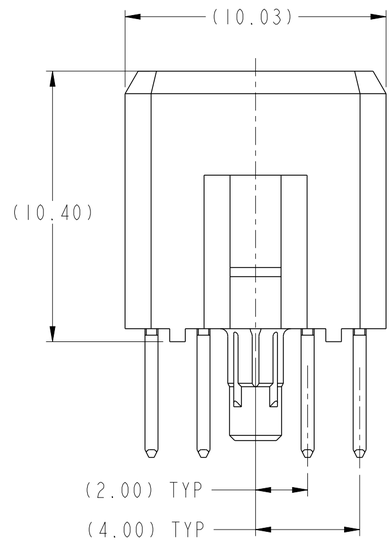

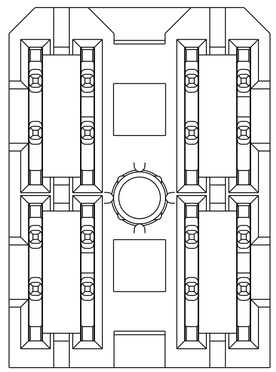

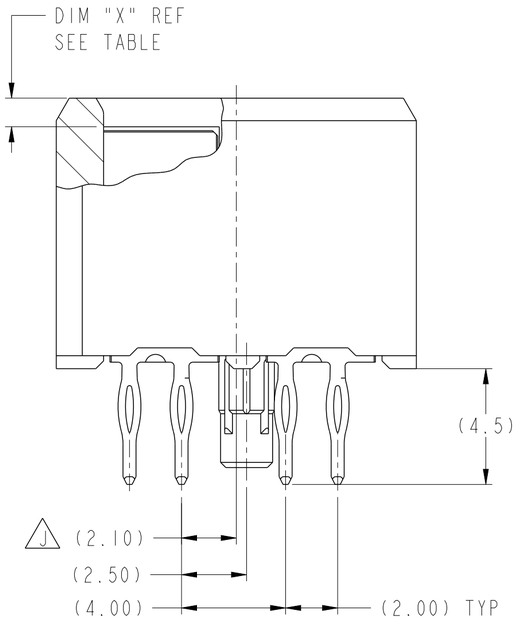

SECTION A-A

spec ref GS-12-220			dr Chen-Hong Tan 2005/08/03	projection	MM	size A2	scale 6:1
tolerance std ASME Y14.5 -	TOLERANCES UNLESS OTHERWISE SPECIFIED		eng Suzie Nah 2014/03/21			ecn no ELX-S-17215-1	
			chr - -				
			appr Chen-Hong Tan 2014/03/24	product family 2mm High Power		rel level Released	
surface 3.2	linear	0.X	±.3	FCI	title 2X2 VERTICAL RECEPTACLE ASSY AIRMAX POWER	dwg no 10028916	rev L
		0.XX	±.1				
		0.XXX	±.05				
ASME Y14.5	angular	0°	±2°	www.fci.com	cat. no. -	Product - Customer Drw	sheet 1 of 2

Copyright FCI.

TOP LAYER DESCRIPTION	TABLE I PLATED THROUGH-HOLE REQUIREMENTS							
	DRILLED HOLE DIAMETER	COPPER THICKNESS	TIN-LEAD THICKNESS	NICKEL THICKNESS	GOLD THICKNESS	TIN THICKNESS	SILVER THICKNESS	FINISHED HOLE DIAMETER (DIM"A")
TIN-LEAD	0.81-0.86 (0.85 DRILL)	0.025 - 0.050	0.005 - 0.015	--	--	--	--	0.65 - 0.80
IMMERSION TIN	0.81-0.86 (0.85 DRILL)	0.025 - 0.050	--	--	--	0.9 - 1.5um	--	0.70 - 0.80
IMMERSION SILVER	0.81-0.86 (0.85 DRILL)	0.025 - 0.050	--	--	--	--	0.15 - 0.65um	0.70 - 0.80
COPPER (SEE NOTE 12)	0.81-0.86 (0.85 DRILL)	0.025 - 0.050	--	--	--	--	--	0.70 - 0.80
GOLD	0.81-0.86 (0.85 DRILL)	0.025 - 0.050	--	0.003 - 0.007	FLASH UP TO 0.0002	--	--	0.69 - 0.80

NOTES:

1. CONNECTOR MATERIALS:
   HOUSING: HIGH TEMPERATURE THERMOPLASTIC, BLACK UL 94V-0 COMPLIANT
   CONTACT: HIGH PERFORMANCE COPPER ALLOY

2. CONTACT PLATING:
   PRESS-FIT TAIL: 0.5um TIN-LEAD OVER NICKEL.
   SEPARABLE INTERFACE: 0.76um MIN GXT OVER NICKEL.

3. CONTACT PLATING (LEAD-FREE):
   PRESS-FIT TAIL: 0.5um MIN MATTE TIN OVER NICKEL.
   SEPARABLE INTERFACE: 0.76um MIN GXT OVER NICKEL.

4. PRODUCT SPECIFICATION: GS-12-220

5. APPLICATION SPECIFICATION: GS-20-023

6. PRODUCT MARKING (PRODUCT NUMBER & LOT CODE) ON HOUSING IN AREA SHOWN, EITHER SIDE.

7. MINIMUM NOMINAL BOARD THICKNESS: 2.4mm

8. REFER TO CUSTOMER DRAWING SK100359II FOR INFORMATION REGARDING PCB LAYOUT OF POWER AND GUIDE MODULES RELATIVE TO AIRMAX SIGNAL MODULES.

9. PRODUCT MEETS EUROPEAN UNION DIRECTIVES AND OTHER COUNTRY REGULATIONS AS DESCRIBED IN FCI SPECIFICATION GS-22-008.

10. PACKAGING MEETS FCI SPECIFICATION GS-14-920

11. HOUSING COMPONENT WILL WITHSTAND EXPOSURE TO 260° PEAK TEMPERATURE FOR 60 SECONDS IN A CONVECTION, INFRA-RED OR VAPOR-PHASE REFLOW OVEN.

12. COPPER PLATING THICKNESS AT CENTER OF VIA HOLE CAN BE NO MORE THAN 0.003 LESS THAN OTHER AREAS.

13. KEEPOUT AREA APPLICABLE FOR HIGH PROFILE POWER HEADER WITH 14.70MM HEIGHT ABOVE TOP SURFACE OF DAUGHTER CARD. IT MAY BE 11.5MM IF A LOWER PROFILE HEADER IS USED.

14. A △ SYMBOL WILL BE NEXT TO ANY DIMENSION, VIEW, OR NOTE WHICH HAS BEEN MODIFIED WITH THE CURRENT DRAWING REVISION

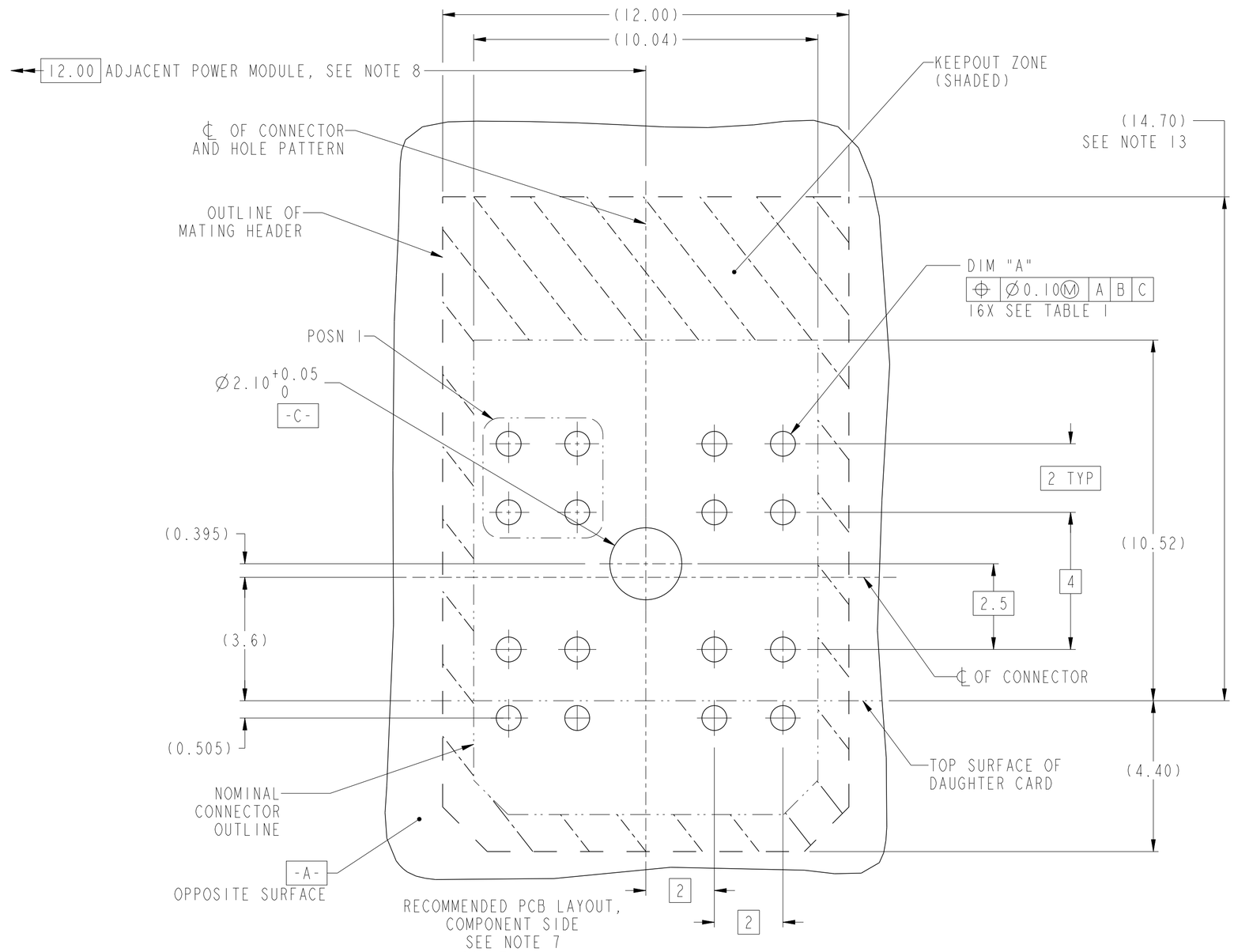

spec ref GS-12-220		dr Chen-Hong Tan 2005/08/03	projection	MM	size A2	scale 1:1
tolerance std ASME Y14.5 -	TOLERANCES UNLESS OTHERWISE SPECIFIED	eng Suzie Nah 2014/03/21			ecn no ELX-S-17215-1	
		chr - -				
		appr Chen-Hong Tan 2014/03/24	product family 2mm High Power		rel level Released	
surface 3.2	linear 0.X ±.3 / 0.XX ±.1 / 0.XXX ±.05	FCI	title 2X2 VERTICAL RECEPTACLE ASSY AIRMAX POWER		dwg no 10028916	rev L
ASME Y14.5	angular 0° ±2°	www.fci.com	cat. no. -	Product - Customer Drw		sheet 2 of 2

Copyright FCI.