CASE FINISH	CURRENT (AMPS)	WORKING VOLTAGE -55°C TO +85°C AC	WORKING VOLTAGE -55°C TO +85°C DC	WORKING VOLTAGE -55°C TO +125°C AC	WORKING VOLTAGE -55°C TO +125°C DC	MAXIMUM DC RESISTANCE (OHMS)	MAXIMUM VOLTAGE DROP DC	MAXIMUM VOLTAGE DROP AC	MINIMUM CAPACITANCE (uF)	MIN. INSERTION LOSS PER MIL-STD-220 FULL LOAD, +25°C 14 KHz	30 KHz	50 KHz	75 KHz	100 KHz	150 KHz	300 KHz	500 KHz	1 MHz	10 MHz	100 MHz	1 GHz	10 GHz
SOLDER	3	---	150	---	100	0.06	0.18	---	1.0	--	--	--	--	5	16	41	--	75	80	--	80	--

PART MARKING:

9001-100-1015
SCI DATE CODE

PACKAGE MARKING:

STANDARD

MARKING NOTES:

N/A

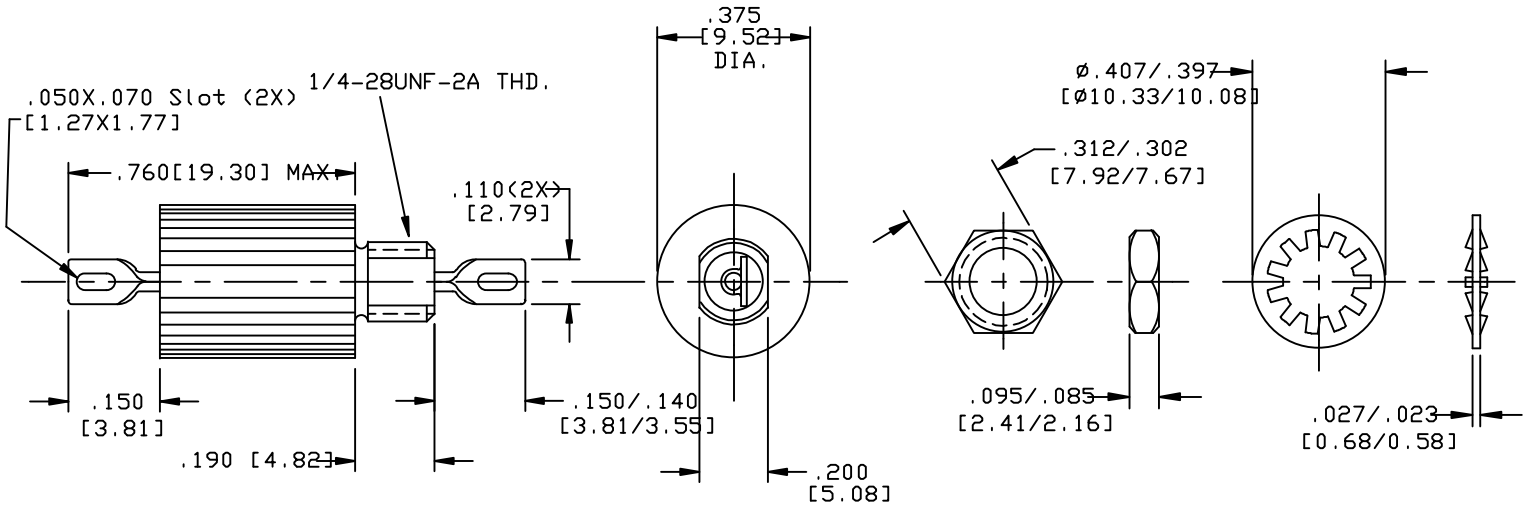

SCHEMATIC

MTG. HARDWARE

NOTES:

1) MOUNTING TORQUE NOT TO EXCEED 7in-lbs.

REV. NO.	CHANGE NOTICE
02	CN. 176736
01	CN. 154116
00	CN. 153496

UNLESS OTHERWISE SPECIFIED DIMENSIONS ARE IN INCHES. [MILLIMETERS]

DO NOT SCALE.

TOLERANCES UNLESS OTHERWISE SPECIFIED
Fractions
Dec. .xx±
Dec. .xxx±010
Angles ±0° 30'

CODE IDENT. NO. OLSP2

SPECTRUM CONTROL INC.

ERIE, FAIRVIEW PENNSYLVANIA

Dwn KAUFFMAN
Ckd. 11-5-96

Description: Low Pass EMI Filter

Sheet 1 of 1

9001-100-1015

Quality Products From The Specialists In Electro-Magnetic Compatibility