ALL RIGHTS RESERVED. NO PORTION OF THIS PUBLICATION, WHETHER IN WHOLE OR IN PART CAN BE REPRODUCED WITHOUT THE EXPRESS WRITTEN CONSENT OF SPC TECHNOLOGY.

REVISIONS			DOC. NO. SPC-F004 * Effective: 12/21/98 * DCP No: 680					
DCP #	REV	DESCRIPTION	DRAWN	DATE	CHECKD	DATE	APPRVD	DATE
	B	REVISED & REDRAWN	J.C.	12/28/92			J.L.	2/8/93
948	C	UPDATED WAS IN 5*	HYO	6/28/00	JC	10/4/00	JC	10/4/00

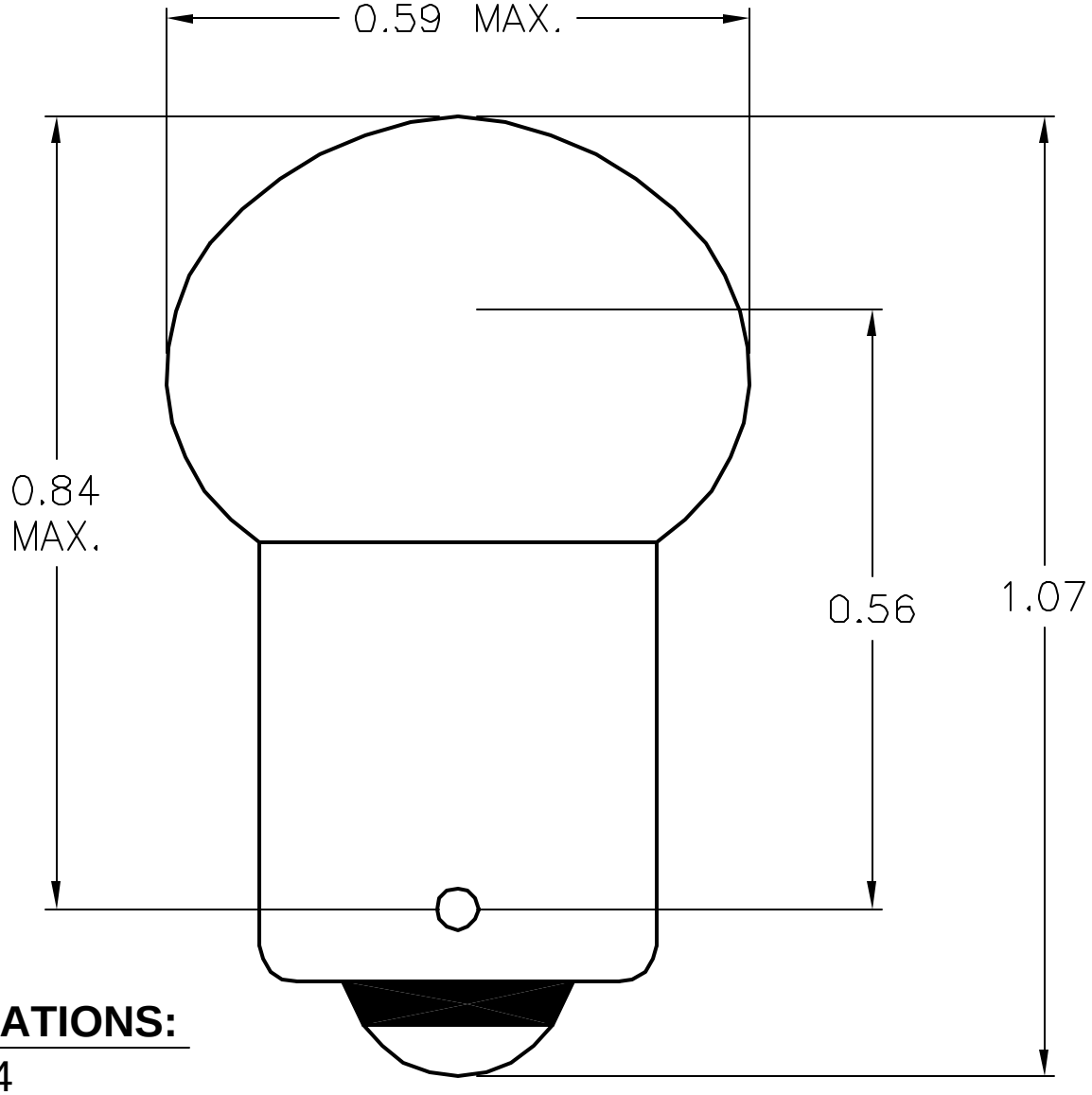

SPECIFICATIONS:

1. Volts: 14
2. AMPS: 0.27
3. Watts: 3.78
4. MSCP: 2
5. Filament: C-2F
6. Life: 2000 Hours

SPC-F004.DWG

DISCLAIMER:
ALL STATEMENTS AND TECHNICAL INFORMATION CONTAINED HEREIN ARE BASED UPON INFORMATION AND/OR TESTS WE BELIEVE TO BE ACCURATE AND RELIABLE. SINCE CONDITIONS OF USE ARE BEYOND OUR CONTROL, THE USER SHALL DETERMINE THE SUITABILITY OF THE PRODUCT FOR THE INTENDED USE AND ASSUME ALL RISK AND LIABILITY WHATSOEVER IN CONNECTION THEREWITH.

UNLESS OTHERWISE SPECIFIED, DIMENSIONS ARE FOR REFERENCE PURPOSES ONLY.

DRAWN BY:	DATE:
J.C.	12/28/92
CHECKED BY:	DATE:
J.P.	2/2/93
APPROVED BY:	DATE:
J.L.	2/8/93

SPC TECHNOLOGY

DRAWING TITLE: G 4-1/2 MINIATURE BAYONET LAMP

SIZE	DWG. NO.	ELECTRONIC FILE	REV
A	1895	96F7968.DWG	C

SCALE: NTS | U.O.M.: INCHES | SHEET: 1 OF 1