THIS DRAWING IS UNPUBLISHED. RELEASED FOR PUBLICATION -,- .
© COPYRIGHT - By - ALL RIGHTS RESERVED.

LOC	DIST
—	—

REVISIONS

P	LTR	DESCRIPTION	DATE	DWN	APVD
	J2	NEW DRAWING PER ECO-11-019045	02APR12	KH	DR

AMP WIRE RANGE	Listed FILE E13288	LR7189 Certified
12-10 AWG SOLID OR STRANDED	12-10 AWG SOLID OR STRANDED	12-10 AWG SOLID OR STRANDED

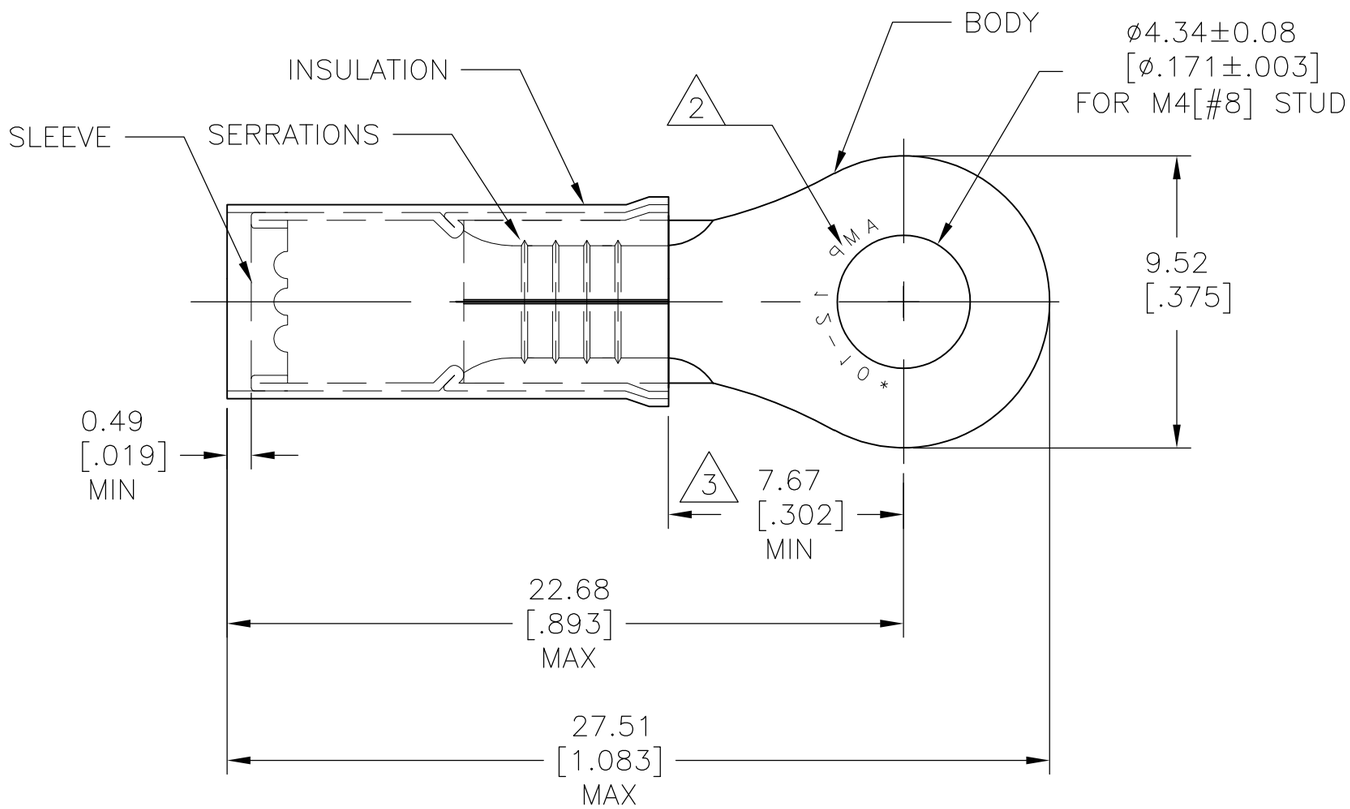

1. ALTERNATE PVC INSULATION MATERIAL FOR FOREIGN SUBSIDIARIES ONLY.
2. STAMP AMP 12-10* APPROX AS SHOWN
3. DIMENSION APPLIES FROM EDGE OF METAL WIRE BARREL TO CENTER OF STUD HOLE
4. FOR WIRE INSULATION DIA: 3.81[.150] TO 6.35[.250]
5. TONGUE MATERIAL THK: 1.02±0.05[.040±.002]
6. MATERIAL:
   BODY&SLEEVE: COPPER PER ASTM B152
   INSULATION: NYLON.(1)
7. FINISH:
   BODY&SLEEVE: TIN PLATE PER ASTM B545
   INSULATION: COLOR-YELLOW

MILITARY PART NO& CLASS	QTY	PACKAGE TYPE	PART NO
—	100	LOOSE PC, BOX	8-35108-1
—	500	LOOSE PIECE	3-35108-1
MS25036-156 CLASS 2	2500	ON TAPE, REEL	2-35108-1
MS25036-156 CLASS 1&2	500	LOOSE PIECE	35108

AMP INCORPORATED
CUSTOMER SERVICE SYSTEMS

FOR ADDITIONAL PRODUCT INFORMATION OR COPIES OF DRAWINGS AND TECHNICAL DOCUMENTS	PRODUCT INFORMATION CENTER 1-800-522-6752	RECOMMENDED OPERATING TEMPERATURE: 105°C [221°F]
FOR APPLICATION TOOLING INFORMATION	TOOLING ASSISTANCE CENTER 1-800-722-1111	VOLTAGE RATING: 300V MAX
FOR ORDER ENTRY	1-800-526-5142	WIRE CROSS SECTIONAL AREA RANGE: 2.62-6.64mm² [5,180-13,100] SOLID OR STRANDED

THIS DRAWING IS A CONTROLLED DOCUMENT.

DIMENSIONS: mm [INCHES]

TOLERANCES UNLESS OTHERWISE SPECIFIED:

0 PLC	± -
1 PLC	± -
2 PLC	± 0.20[.008]
3 PLC	± -
4 PLC	± -
ANGLES	± 5°

MATERIAL (6) FINISH (7)

DWN	KIRAN HOLAL	02APR12
CHK	ROHDE DANIEL	02APR12
APVD	ROHDE DANIEL	02APR12
PRODUCT SPEC	—	
APPLICATION SPEC	—	
WEIGHT	—	

TE Connectivity

NAME: WIRE TERMINAL P.I.D.G RING TONGUE WIRE SIZE: 12-10

SIZE	CAGE CODE	DRAWING NO	RESTRICTED TO
A3	00779	C-35108	—

CUSTOMER DRAWING | SCALE 5:1 | SHEET 1 OF 1 | REV J2

1470-19 (3/11)