THIS DRAWING IS UNPUBLISHED. RELEASED FOR PUBLICATION -,- .
© COPYRIGHT - By - ALL RIGHTS RESERVED.

LOC	DIST
—	—

REVISIONS

P	LTR	DESCRIPTION	DATE	DWN	APVD
	F2	NEW DRAWING PER ECO-11-019045	03APR12	KH	DR

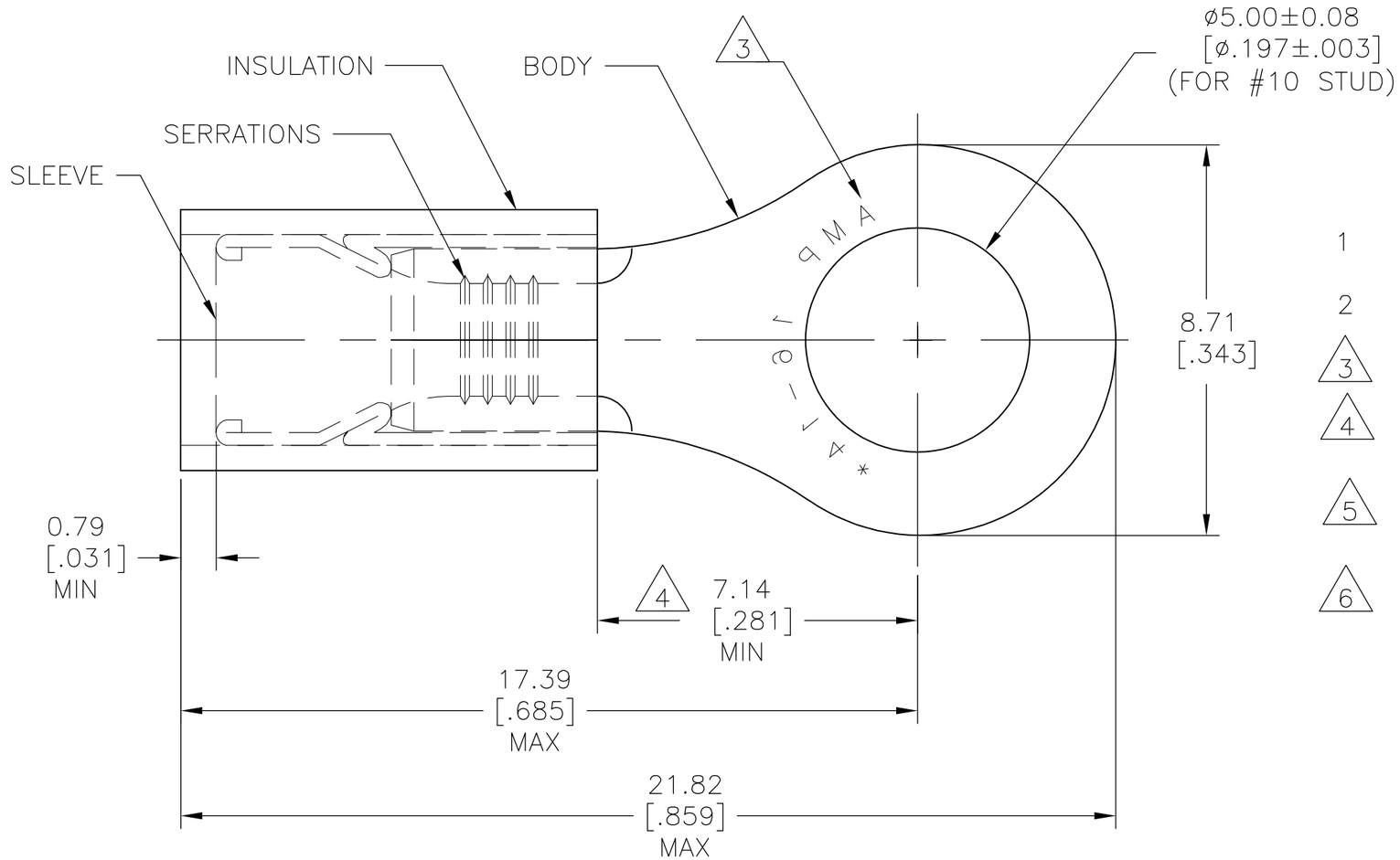

AMP WIRE RANGE	Listed FILE E13288
16-14 AWG SOLID OR STRANDED	16-14 AWG SOLID OR STRANDED

1 FOR 2.68[.105] TO 3.81[.150] WIRE INSULATION DIA

2 TONGUE MATERIAL THK: 0.79±0.05[.031±.002]

3 STAMP AMP 16-14* APPROX AS SHOWN,

4 DIMENSION APPLIES FROM EDGE OF METAL WIRE BARREL TO CENTER OF STUD HOLE.

5 MATERIAL: BODY & SLEEVE: COPPER PER ASTM B152.
INSULATION : NYLON

6 FINISH: BODY & SLEEVE: TIN PLATE PER ASTM B545.
INSULATION: COLOR-BLUE.

QTY	PACKAGE TYPE	PART NO
100	LOOSE PC, BOX	8-320574-1
5000	ON TAPE REEL	2-320574-2
1000	LOOSE PIECE	320574

AMP INCORPORATED
CUSTOMER SERVICE SYSTEMS

FOR ADDITIONAL PRODUCT INFORMATION OR COPIES OF DRAWINGS AND TECHNICAL DOCUMENTS	PRODUCT INFORMATION CENTER 1-800-522-6752	RECOMMENDED OPERATING TEMPERATURE: 105°C[221°F]
		VOLTAGE RATING: 300V MAX
FOR APPLICATION TOOLING INFORMATION	TOOLING ASSISTANCE CENTER 1-800-722-1111	WIRE CROSS SECTIONAL AREA RANGE: 1.04-2.62mm² [2,050-5,180] CIR.MIL SOLID OR STRANDED
FOR ORDER ENTRY	1-800-526-5142	

THIS DRAWING IS A CONTROLLED DOCUMENT.

DIMENSIONS: mm [INCHES]

TOLERANCES UNLESS OTHERWISE SPECIFIED:
0 PLC ± -
1 PLC ± -
2 PLC ± 0.20[.008]
3 PLC ± -
4 PLC ± -
ANGLES ± 5°

MATERIAL 5

FINISH 6

DWN	KIRAN HOLAL	02APR12
CHK	ROHDE DANIEL	02APR12
APVD	ROHDE DANIEL	02APR12
PRODUCT SPEC	—	
APPLICATION SPEC	—	
WEIGHT	—	

TE Connectivity

NAME
WIRE TERMINAL
P.I.D.G RING TONGUE
WIRE SIZE: 16-14

SIZE	CAGE CODE	DRAWING NO	RESTRICTED TO
A3	00779	C-320574	—

CUSTOMER DRAWING | SCALE 8:1 | SHEET 1 OF 1 | REV F2

1470-19 (3/11)