THIS DRAWING IS UNPUBLISHED. RELEASED FOR PUBLICATION -,- .
© COPYRIGHT - By - ALL RIGHTS RESERVED.

LOC	DIST
AF	50

REVISIONS

P	LTR	DESCRIPTION	DATE	DWN	APVD
	D	REVISED PER ECR-12-013518	23NOV2012	KH	PD

1 CONTINUOUS STRIP ON REELS.

2 MATING TAB THK .032±.001

3 WIRE SIZE IS 14-10 OR TWO #14'S

4 INSULATION RANGE IS .220-.275 OR TWO AT .140 DIA MAX

5 PRELIMINARY - NOT FOR PRODUCTION

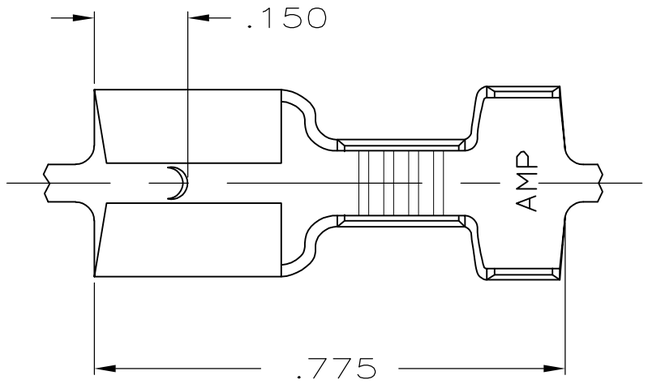

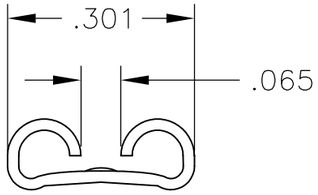

VIEW A-A

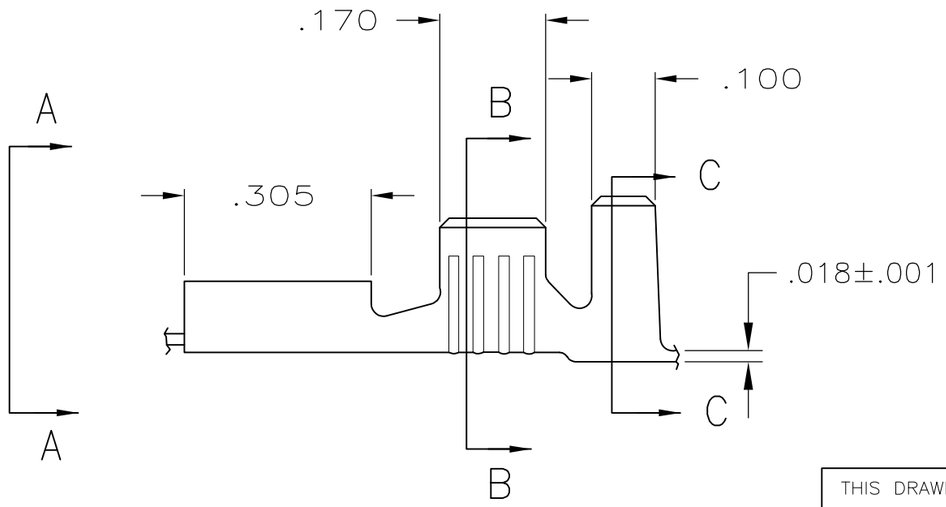

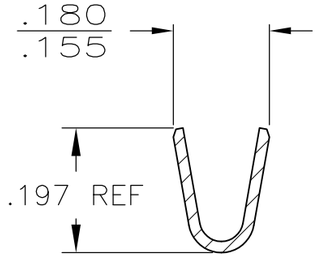

SECT B-B

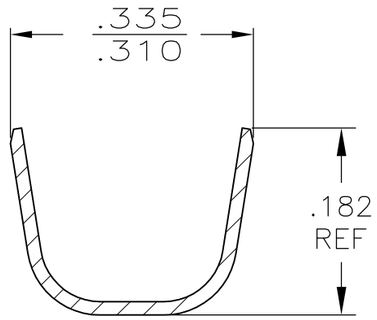

SECT C-C

---	5 63419-2
TIN	63419-1
FINISH	PART NO.

THIS DRAWING IS A CONTROLLED DOCUMENT.

DIMENSIONS: INCHES

TOLERANCES UNLESS OTHERWISE SPECIFIED:

0 PLC	± -
1 PLC	± -
2 PLC	± -
3 PLC	± .010
4 PLC	± -
ANGLES	± -

MATERIAL: BRASS

FINISH: SEE TABLE

DWN	JR RUTH	1-16-86
CHK	R KUZO	1-20-86
APVD	G YETTER	1-20-86
PRODUCT SPEC	—	
APPLICATION SPEC	—	
WEIGHT	—	

TE Connectivity

NAME: RECEPTACLE, FASTON, .250 SERIES

SIZE	CAGE CODE	DRAWING NO	RESTRICTED TO
A3	00779	C-63419	—

CUSTOMER DRAWING

SCALE	SHEET	REV
4:1	1 OF 1	D