© COPYRIGHT BY TRP CONNECTOR ALL RIGHTS RESERVED.

REVISIONS					
P	LTR	DESCRIPTION	DATE	DWN	APVD
	E	LOGO CHANGE	07APR2013	QL	KZ

MECHANICAL:

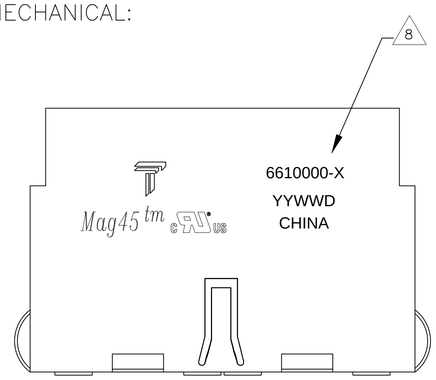

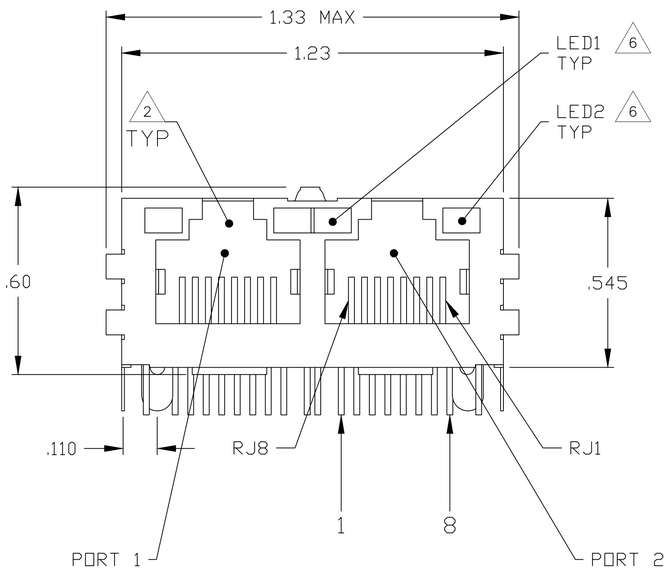

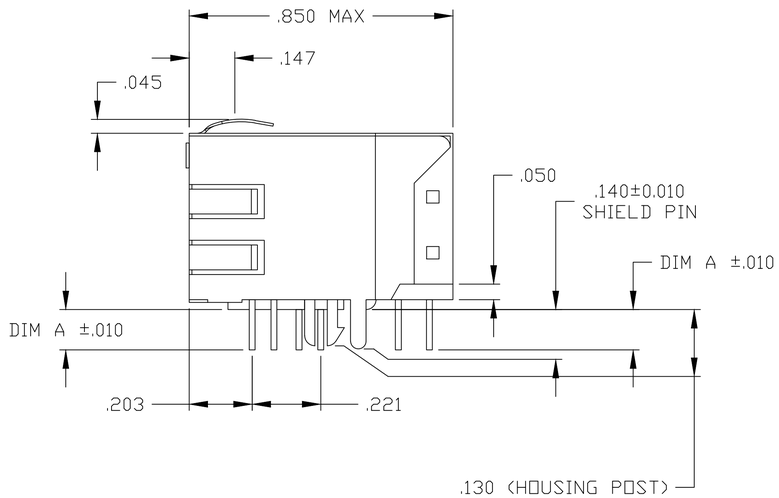

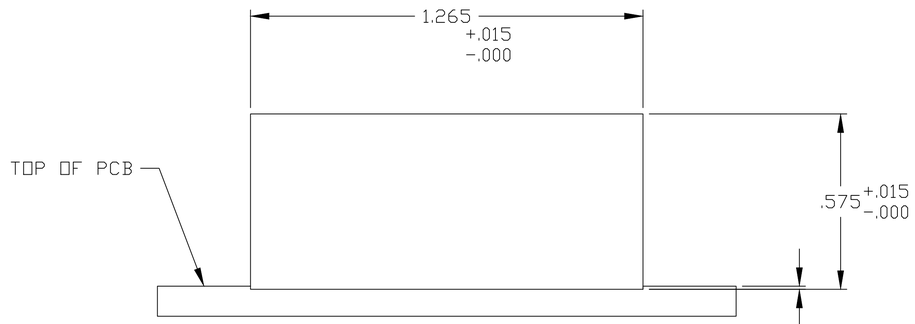

1X2 SUGGESTED PANEL CUTOUT

1. MATERIALS:
-HOUSING - THERMOPLASTIC PET POLYESTER FLAMMABILITY RATING UL 94V-0.
-SHIELD - .010" THICK, C26800 BRASS PREPLATED WITH 30µINCH MIN SEMI-BRIGHT NICKEL. SOLDER TABS POST DIPPED WITH 100µINCH MIN SAC SOLDER.
-MOD JACK CONTACTS - 0.0157 X 0.018" PHOSPHOR BRONZE, 50µINCH MIN OVERALL NICKEL UNDERPLATE WITH SELECT 50µINCH MIN HARD GOLD FINISH PLATE. SOLDERTAILS WITH 100µINCH MIN MATTE TIN AND/OR SAC SOLDER DIP.
-LIGHT EMITTING DIODE(LED) - DIFFUSED EPOXY LENS, .020" X .020" CARBON STEEL WIREFRAME LEADS PRE-PLATED WITH 80µINCH SILVER OVER 40µINCH NICKEL UNDERPLATE OVER 40µINCH COPPER UNDERPLATE. POST-PLATED WITH 100µIN MIN MATTE TIN AND/OR SAC SOLDER DIP OR PURE TIN SOLDER DIP.

2. RJ45 JACK CAVITY CONFORMS TO FCC RULES AND REGULATIONS PART 68, SUB PART F.

3. MAGNETICS
-IMPEDANCE: 100 OHMS
-TURNS RATIO (CHIP:CABLE): TX = 1:1, RX = 1:1
-OPEN CIRCUIT INDUCTANCE (OCL): 350µH MIN @100kHz, 0.1VRMS, 8mADC BIAS FROM 0°C TO 70°C, TX AND RX
-PERFORMANCE @ 25°C:
INSERTION LOSS (IL): 1.1dB MAX FROM 0.5MHz TO 100MHz
RETURN LOSS (RL): 18dB MIN FROM 0.5MHZ TO 30MHz
18-20LOG(f/30)dB MIN FROM 30.1MHz TO 60MHz
12dB MIN FROM 60.1MHz TO 80MHz
CROSSTALK ATTENUATION: 35dB MIN FROM 0.5MHz TO 40MHz
33-20×LOG(f/50)dB MIN FROM 40.1MHz TO 100MHz
COMMON MODE REJECTION RATIO (CMRR): 30dB MIN FROM 0.5MHz TO 100MHz
-ISOLATION VOLTAGE: 2250VDC (MAX) FOR 60 SECONDS WITH A RISE TIME OF 500V/SEC AND WITH ALL PORTS CONNECTED.

4. C1 IS AN OPTIONAL. IF NO CAPACITOR, TRACE IS CONTINUOUS. SEE TABLE FOR PRESENCE OF CAPACITOR IN DIFFERENT CONFIGURATIONS.

5. OPERATING TEMPERATURE:FROM 0° TO +70°C

6. THE 250 OHM LED RESISTORS ARE OPTIONAL, PLEASE SEE CHART FOR PRESENCE OR ABSENCE OF LED RESISTORS. IF THE LED WITHOUT 250 OHM RESISTORS, LED IS DRIVEN WITH CONSTANT CURRENT AT APPROX 20mA.
LED COLOR: DOMINANT WAVELENGTH (λD): GREEN 568 nm TYP. @ IF=20mA
FORWARD VOLTAGE (VF): GREEN 2.2V TYP. @ IF=20mA
DOMINANT WAVELENGTH (λD): YELLOW 588 nm TYP. @ IF=20mA
FORWARD VOLTAGE (VF): YELLOW 2.1V TYP. @ IF=20mA.
DOMINANT WAVELENGTH (λD): ORANGE 605 nm TYP. @ IF=20mA
FORWARD VOLTAGE (VF): ORANGE 2.05V TYP. @ IF=20mA.
IF THE LED WITH 250 OHM RESISTORS,LED IS DRIVEN WITH 5V VOLTAGE AND THE MAX OPERATING CURRENT IS 20mA.
LED COLOR : DOMINANT WAVELENGTH (λD): GREEN 568 nm TYP. @ VF=5V
FORWARD CURRENT (IF): GREEN 12 mA TYP. @ VF=5V
DOMINANT WAVELENGTH (λD): YELLOW 588 nm TYP. @ VF=5V
FORWARD CURRENT (IF): YELLOW 13 mA TYP. @ VF=5V

7. INDICATED CONNECTIONS ARE FOR NIC CONFIGURATION. THE MAGNETICS ARE SYMMETRICAL AND SUPPORT AUTO-MDI/MDIX.

8. TRP CONNECTOR LOGO, PART NUMBER, DATE CODE, COUNTRY OF ORIGIN AND AGENCY APPROVAL MARKING IN APPROXIMATE LOCATION SHOWN.

9. THESE PARTS ARE RECOMMENDED FOR WAVE SOLDERING PROCESS, PEAK WAVE SOLDERING TEMPERATURE IS 265°C, 10SECONDS MAX.

DIM A	LED RESISTOR 6	DECOUPLING CAPACITOR 4	LED1	LED2	PART NUMBER
0.087	YES	YES	GREEN	YELLOW	7-6610000-1
0.145	YES	YES	GREEN	GREEN	6-6610000-1
0.145	YES	YES	GREEN	YELLOW	5-6610000-1
0.145	NO	NO	GREEN	YELLOW	6610000-8

THIS DRAWING IS A CONTROLLED DOCUMENT.

DIMENSIONS: INCHES

TOLERANCES UNLESS OTHERWISE SPECIFIED:
0 PLC ± –
1 PLC ± –
2 PLC ± .010
3 PLC ± .005
4 PLC ± –
ANGLES ± –

MATERIAL 1
FINISH 1

DWN L. VARELA – DOCK5 15MAR2005
CHK D. FAROLE 15MAR2005
APVD D. FAROLE 15MAR2005
PRODUCT SPEC 108-2100
APPLICATION SPEC –
WEIGHT –

TRP connector
Dongguan China

NAME 1X2 MAG45(TM) MODULAR JACK, 7N2 SCHEMATIC, 26 SERIES CIRCUIT, SHIELDED, WITH LEDS

SIZE	CAGE CODE	DRAWING NO	RESTRICTED TO
A1	00779	C-6610000	–

CUSTOMER DRAWING | SCALE 4:1 | SHEET 1 OF 2 | REV E

© COPYRIGHT BY TRP CONNECTOR ALL RIGHTS RESERVED.

726 SERIES MAGNETIC CIRCUIT 3 7

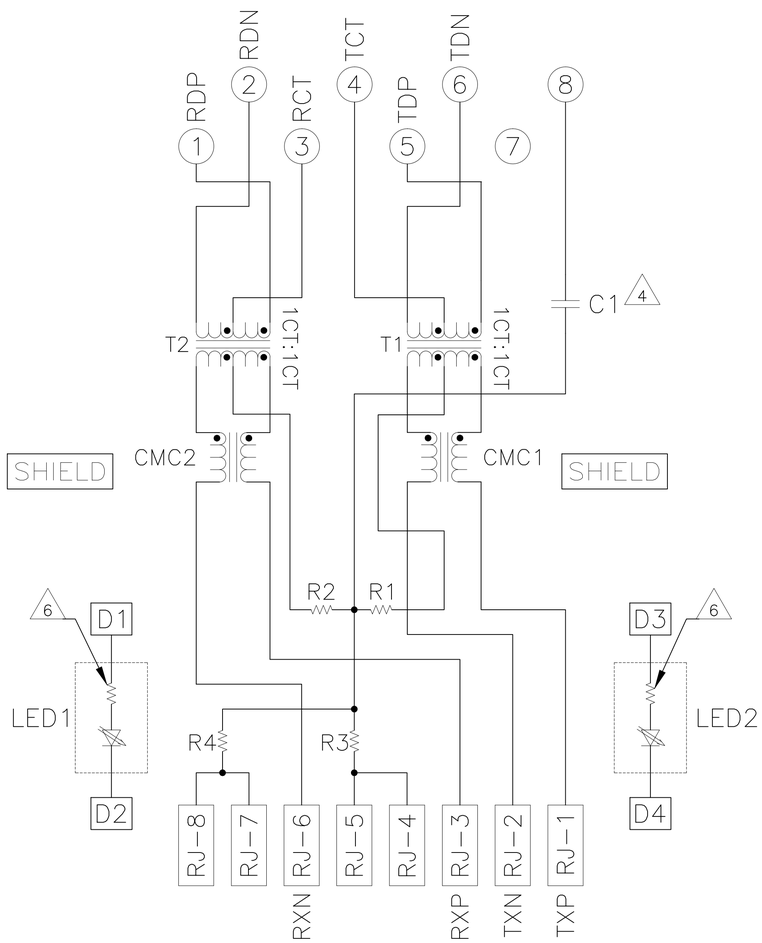

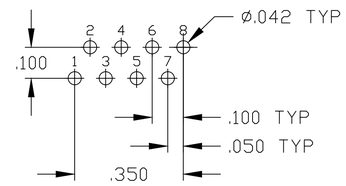

PIN DESIGNATION

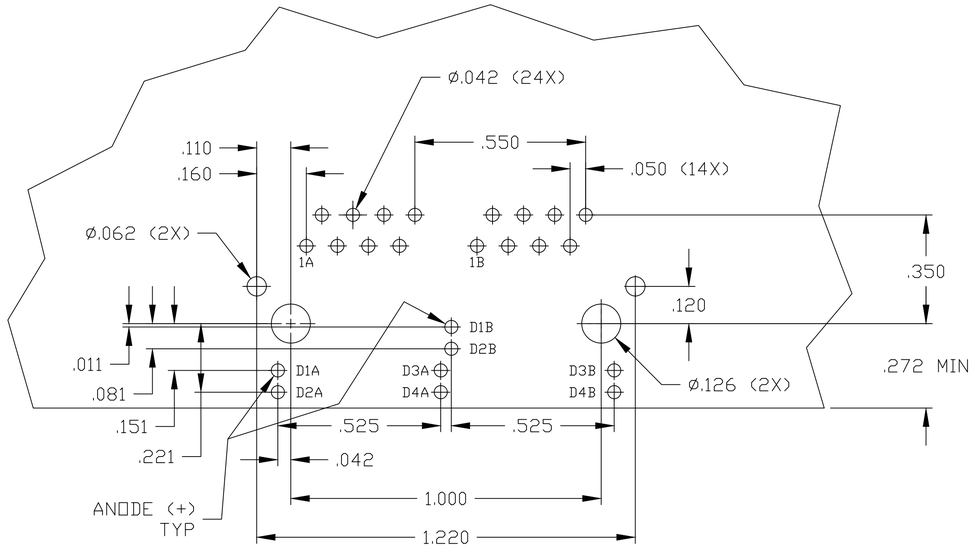

SUGGESTED PCB LAYOUT
(Component Side)

THIS DRAWING IS A CONTROLLED DOCUMENT.	DWN L. VARELA – DOCK5 15MAR2005	TRP connector	TRP connector Dongguan China
DIMENSIONS: INCHES	CHK D. FAROLE 15MAR2005		
TOLERANCES UNLESS OTHERWISE SPECIFIED: 0 PLC ± – 1 PLC ± – 2 PLC ± .010 3 PLC ± .005 4 PLC ± – ANGLES ± –	APVD D. FAROLE 15MAR2005	NAME	1X2 MAG45(TM) MODULAR JACK, 7N2 SCHEMATIC, 26 SERIES CIRCUIT, SHIELDED, WITH LEDS
	PRODUCT SPEC 108–2100		
	APPLICATION SPEC –	SIZE A1 / CAGE CODE 00779 / DRAWING NO ©=6610000	RESTRICTED TO –
MATERIAL 1 / FINISH 1	WEIGHT –		
	CUSTOMER DRAWING	SCALE 4:1	SHEET 2 OF 2 / REV E