THA-207 Lever Handle Latch

■Characteristic

Easy to grip by its longer neck.

■Application

Distribution boards /
Distribution panels /
Control boards

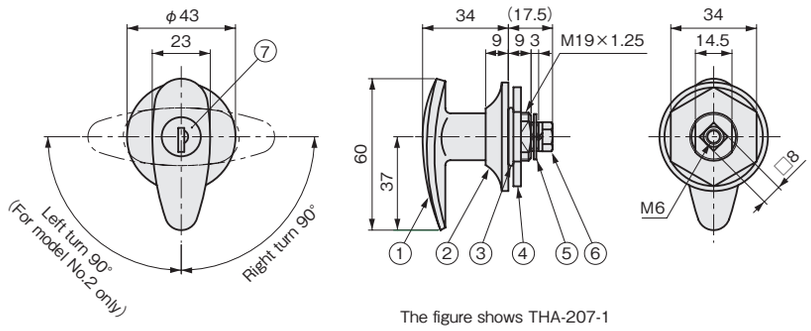

The figure shows THA-207-1

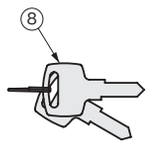

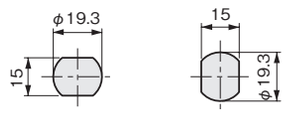

For left turn (Model No.2 only) — For right turn (Both model No.1 and No.2)

Layout of Holes for Installation

Model No.	Key No.	Net Weight(g)	Code No.
THA-207-1	No.500	144	3652
THA-207-2	Without Key	138	3653

■Parts List

No.	Part Name	Material	Finish	Quantity
1	Handle	ZDC	Cr	1
2	Sleeve			1
3	Ring Washer	SUS304	——	1
4	Set Nut	ZDC	Zn	1
5	Square Hole Washer	SPCC		1
6	Cross Hole Head Hexagon Bolt with Washer	S		1
7	Lock	SUS304/ZDC	—/Zn	1
8	Key	BSP	Ni	2

THA-199 Grip Handle Latch

■Characteristic

The handle can be used for both left and right side by turning the flange.

■Application

Small doors / Control boards, etc.

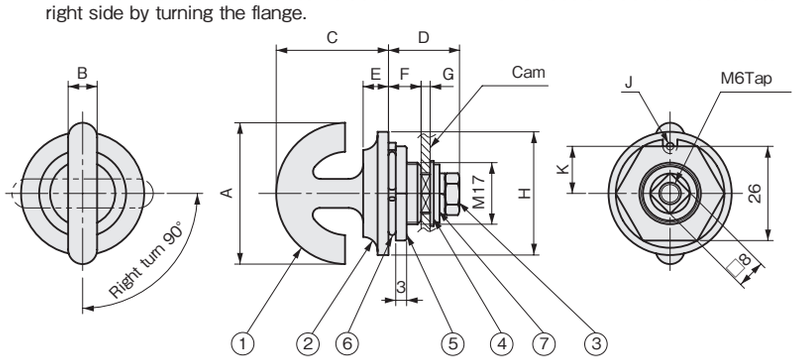

The figure shows the handle for right turn.
Also the figure shows THA-199-1.
The shape of THA-199-2 and THA-199-3 is slightly different.

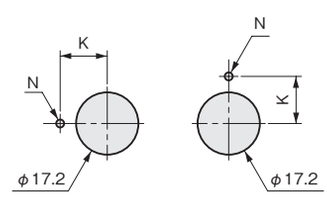

For left turn — For right turn

Layout of Holes for Installation

Model No.	Net Weight(g)	Code No.
THA-199-1	74	3589
THA-199-2	62	3592
THA-199-3	42	3594

■Parts List

No.	Part Name	Material	Finish	Quantity
1	Handle	ZDC	Cr	1
2	Flange			1
3	Cross Hole Head Hexagon Bolt with Washer	S	Zn	1
4	Square Hole Washer	SPCC		1
5	Set Nut	ZDC		1
6	Ring Washer	SUS304	———	1
7	Flat Washer	SPCC	Zn	1

■Size List

Model No.	A	B	C	D	E	F	G	H	J	K	N
THA-199-1	39	φ8	31	(18)	7	9	2.5	φ34	φ2	13	φ2.2
THA-199-2	32	φ7	29	(16)		7	2	φ33		15	
THA-199-3	28	φ5	22		5			φ23	φ2.5	10.5	φ2.7