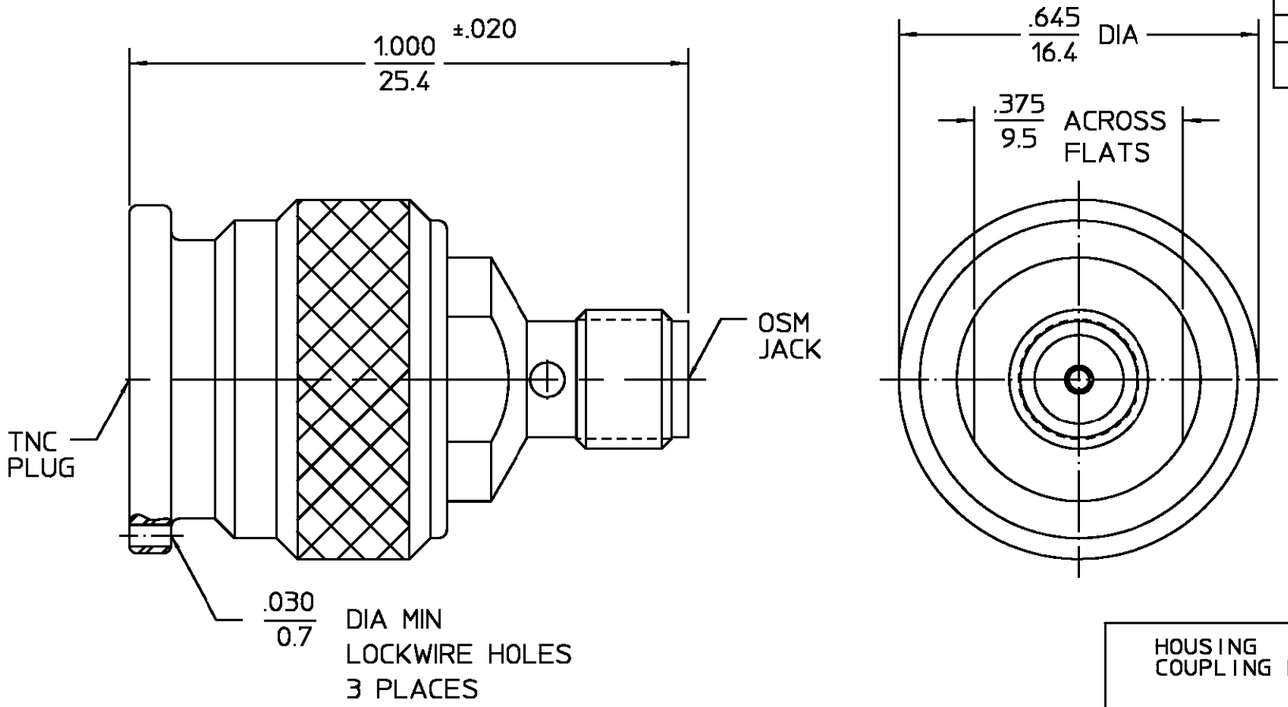

REVISIONS			
REV	DESCRIPTION	DATE	APPROVED
03_1	REVISED	06/09/94	

ELECTRICAL	MECHANICAL	ENVIRONMENTAL
Nominal Impedance (Ohms) 50	Interface Dimensions MIL-STD-348A,	Temperature Rating -65°C to +165°C
Frequency Range (GHz) DC to 11	Fig. TNC: 313.3 OSM:310.2	Vibration MIL-STD-202, Method
Volt Rating (VRMS MAX)	Recommended Mating	204, Condition D.
@ Sea Level 335	Torque TNC Only: 15 in-lbs	Shock MIL-STD-202, Method 213,
VSWR 1.15 + .015 f(GHz)	Mating Characteristics:	Condition I.
Insertion Loss (dB MAX) $.06\sqrt{f(GHz)}$	Insertion (MAX Lbs) 3.0	Thermal Shock MIL-STD-202,
RF Leakage (dB MIN) -60 @ 2-3GHz	Withdrawal (MIN Oz) 1.0	Method 107, Condition C
Corona, 70,000 Ft (VRMS MIN) 375	Force to Engage and	
Dielectric Withstanding Voltage	Disengage (In-Lbs MAX) 2.0	Moisture Resistance MIL-STD-202,
(VRMS MIN) @ Sea Level 1,000	Center Contact Captivation	Method 106
Contact Resistance (Milliohms MAX)	Axial (Lbs) 6.0	Corrosion - MIL-STD-202, Method
Center Contact 4.5	Radial (In-Oz) N/A	101, Condition B, 5% salt spray
Outer Contact 2.2	Cable Retention	
Cable to Housing N/A	Axial Force (Lbs) N/A	
RF High Potential @ Sea Level	Torque (In-Oz) N/A	
(VRMS MIN @ 5 MHz) 1,000	Weight (Grams) TBD	
I.R.(Megohms MIN) 5,000		

$$\frac{.XXX = in}{XX.X = mm}$$

COMPONENT	MATERIAL	FINISH
HOUSING COUPLING NUT	STAINLESS STEEL PER ASTM-A484 AND ASTM-A582, TYPE 303	PASSIVATE PER ASTM-A380
DIELECTRIC	TFE FLUOROCARBON PER ASTM-D-1457	N/A
CENTER CONTACT	BERYLLIUM COPPER PER ASTM B 196, ALLOY C17300, CONDITION H	GOLD PLATE PER MIL-G-45204
RETAINING RING	BERYLLIUM COPPER PER ASTM B 194, ALLOY C17200, CONDITION H	N/A
GASKET	SILICONE RUBBER PER ZZ-R-765	N/A

UNLESS OTHERWISE SPECIFIED DIMENSIONS ARE IN INCHES
TOLERANCE ON
FRAC. ± 1/64 DEC. ±.005 ANGLES ± 1°

DRAWN BY SWA	DATE 6/25/85	
CHECKED BY AH	6/26/85	
APP'D BY DR	7/2/85	

AMP

AMP Incorporated
140 Fourth Avenue
Waltham, MA 02451-7599

These drawings and specifications are the property of Omni Spectra Incorporated and shall not be reproduced or copied or used in whole or in part as the basis for the manufacture or sale of item(s) without written permission.

USE ASS'Y PROCEDURE

NO. A.P. N/A

TITLE TNC PLUG TO OSM JACK ADAPTER

SIZE	CODE IDENT NO.		REV
B	26805	3182-2240-00	03_1
SCALE 8 : 1			SHEET 1 OF 1

CUSTOMER DRAWING

AMP PART # 1057853-1
SHEET 1 OF 1 REV A