THIS DRAWING IS UNPUBLISHED. RELEASED FOR PUBLICATION -,- .
© COPYRIGHT - BY TYCO ELECTRONICS CORPORATION. ALL RIGHTS RESERVED.

LOC	DIST
FT	64

REVISIONS

P	LTR	DESCRIPTION	DATE	DWN	APVD
	M	REV PER 0G3C-0214-99	24AUG00	BH	HW
	M1	REVISED PER ECO-09-021510	14SEP09	KK	AEG

1. RECEPTACLE ACCEPTS AN .008-.014 THK. I.C. LEAD.
2. TWO .000030 MIN.THK.GOLD STRIPES IN CONTACT AREA, TIN-LEAD(93-7) ON CONTACT LEGS, BALANCE OF CONTACT NICKEL PLATED.
3. TWO .000015 MIN.THK.GOLD STRIPES IN CONTACT AREA, TIN-LEAD(93-7) ON CONTACT LEGS, BALANCE OF CONTACT NICKEL PLATED.
4. OBSOLETE PARTS: OBSOLETE CIS STREAMLINING PER D.RENAUD/D.SINISI

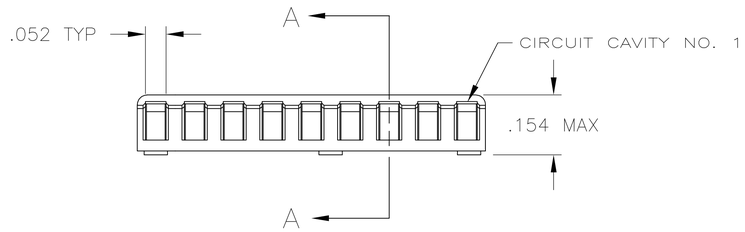

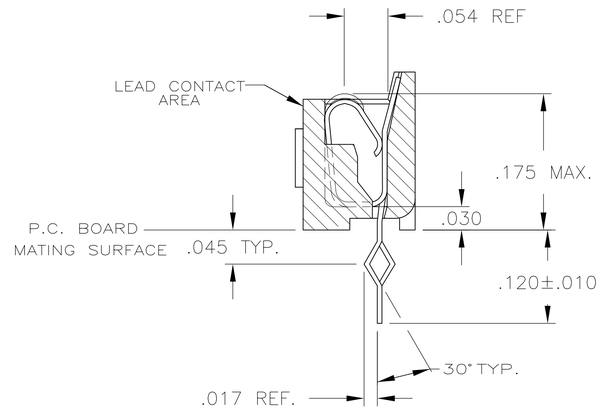

SECTION A-A
ROTATED 90° CW
SCALE 10:1
FOR -6,-7 & ~~-8~~ ONLY 4

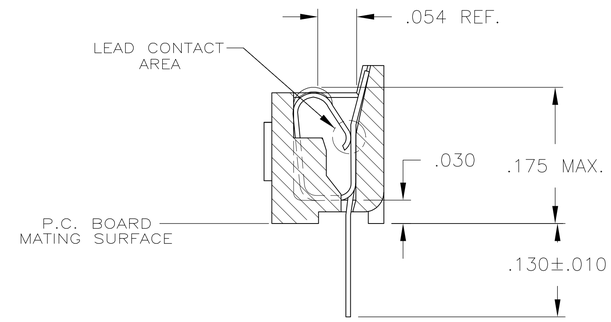

SECTION A-A
ROTATED 90° CW
SCALE 10:1
FOR -1,-2 & -3 ONLY

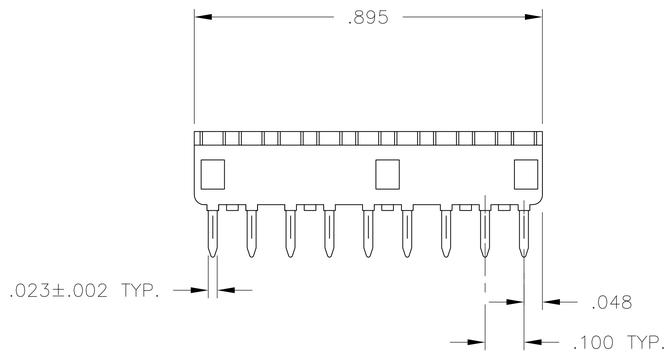

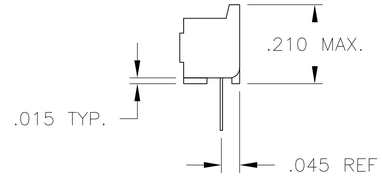

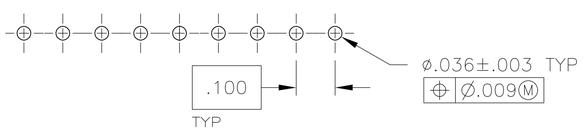

RECOMMENDED MOUNTING HOLE PATTERN

4 OBSOLETE	TINNED	PHOS.BRZ.	GLASS-FILLED THERMOPLASTIC, 94V-0, BLACK	~~643641-8~~
OBSOLETE	2	BE.CU.	GLASS-FILLED THERMOPLASTIC, 94V-0, BLACK	643641-7
	TINNED	BE.CU.	GLASS-FILLED THERMOPLASTIC, 94V-0, BLACK	643641-6
OBSOLETE	3	PHOS.BRZ.	GLASS-FILLED THERMOPLASTIC, 94V-0, BLACK	643641-4
OBSOLETE	TINNED	PHOS.BRZ.	GLASS-FILLED THERMOPLASTIC, 94V-0, BLACK	643641-3
OBSOLETE	2	BE.CU.	GLASS-FILLED THERMOPLASTIC, 94V-0, BLACK	643641-2
OBSOLETE	TINNED	BE.CU.	GLASS-FILLED THERMOPLASTIC, 94V-0, BLACK	643641-1
	CONTACT FINISH	CONTACT MAT'L	HOUSING MATERIAL	PART NO.

THIS DRAWING IS A CONTROLLED DOCUMENT.

DIMENSIONS: INCHES

TOLERANCES UNLESS OTHERWISE SPECIFIED:
0 PLC ± -
1 PLC ± -
2 PLC ± -
3 PLC ± .005
4 PLC ± -
ANGLES ± -

MATERIAL SEE TABLE
FINISH SEE TABLE

DWN M.CYRUS 6-14-84
CHK N.JONES 7-3-84
APVD J.GRAY 7-10-84
PRODUCT SPEC 108-1066
APPLICATION SPEC 114-1049
WEIGHT -

AMP Tyco Electronics Corporation
Harrisburg, PA 17105

NAME SOCKET ASSY, SIP, 9 POS, DIPLOMATE DL -

SIZE	CAGE CODE	DRAWING NO	RESTRICTED TO
A1	00779	C-643641	-

CUSTOMER DRAWING SCALE 5:1 SHEET 1 OF 1 REV M1