THIS COPY IS PROVIDED ON A RESTRICTED BASIS AND IS NOT TO BE USED IN ANY WAY DETRIMENTAL TO THE INTERESTS OF PANDUIT CORP.

PANDUIT P/N	WEIGHT
FR12CS58 FR12CS58M	3.10 LB/PC. (1400g/PC.)

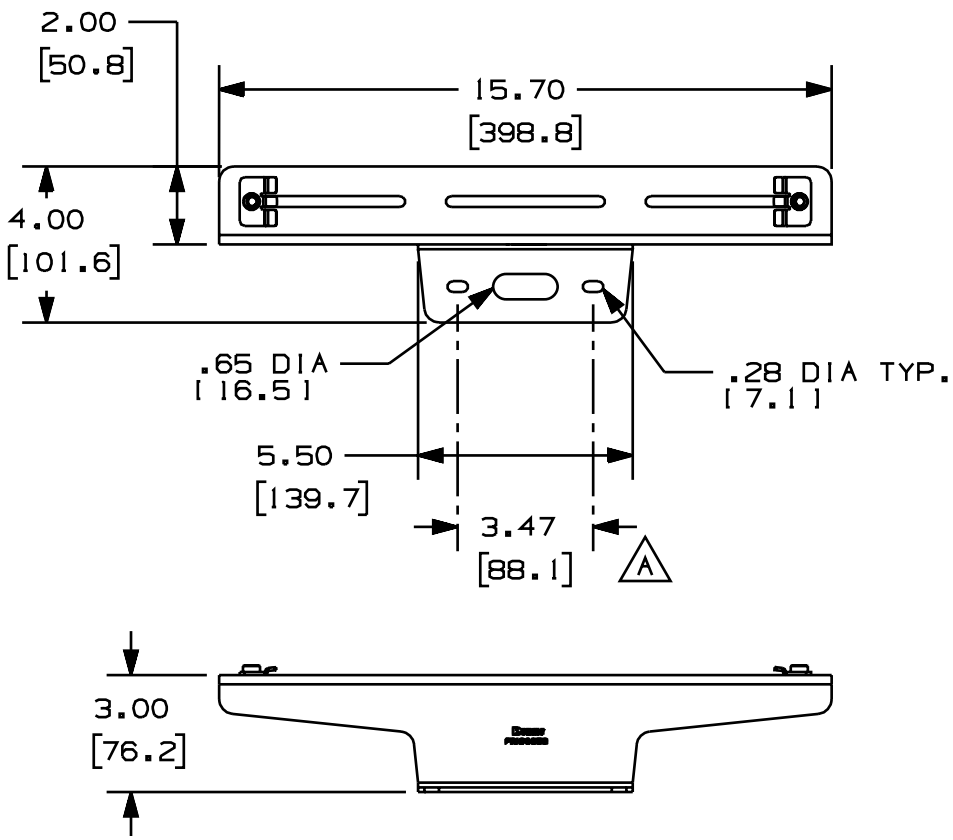

NOTES:

1. SEE CURRENT CATALOG FOR ADDITIONAL PART SUFFIXES TO INDICATE PACKAGE QUANTITY.
2. BRACKET ATTACHES TO 5/8" OR 16mm THREADED ROD (NOT INCLUDED).
3. THE FR12CS58 AND FR12CS58M KITS INCLUDE:
   ONE (1) BRACKET,
   ONE (1) T-FASTENER,
   ONE (1) 1/4-20 "KEPS" LOCK NUT
   TWO (2) BRACKET CLIP ASSEMBLIES,
   TWO (2) 1/4-20 HEX HEAD MACHINE SCREWS,
   TWO (2) 1/4 HELICAL SPRING LOCKWASHERS,
   TWO (2) 5/8-11 HEX NUTS (FR12CS58 ONLY),
   TWO (2) 5/8 HELICAL SPRING LOCKWASHERS
   TWO (2) M16X2 HEX NUTS (FR12CS58M ONLY),
4. FINISH COLOR: BLACK (EXCEPT FOR HARDWARE)
5. DIMENSIONS IN PARENTHESIS ARE IN METRIC.

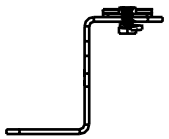

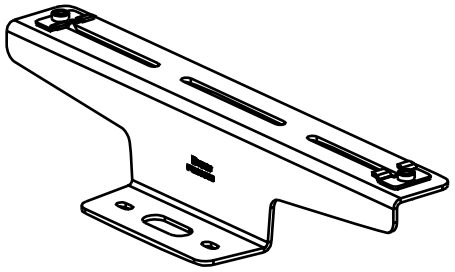

ENG. REF.: D37797DA_DC_FR12CSM_00B.prt

REV	DATE	BY	CHK	DESCRIPTION	ECN	CHK	CUST	SUP
1	11-26-01	JHNU		A. ADDED DIMENSION.	37797-58			
R	5-30-01	JHNU	CFG	RELEASED TO PRODUCTION.	37797-58	HIW	HIW	

CAD FILENAME/LAYERS: 37797-58.PDF

PANDUIT CORP. TINLEY PARK, ILLINOIS

FIBERRUNNER™ 12x4 CENTER SUPPORT FOR THREADED ROD BRACKET KIT (FR12CS58, FR12CS58M)
CUSTOMER DRAWING

UNLESS OTHERWISE SPECIFIED, DIMENSIONAL TOLERANCES ARE:
(.X) ± (.XXX) ±
(.XX) ±.03 (.8) ANGLES ±

UNLESS OTHERWISE SPECIFIED, ALL DIMENSIONS ARE GIVEN IN INCHES, THIRD ANGLE PROJECTION.

DRAWN BY: JHNU
DATE: 5-30-01
CHECKED BY: CFG
MAT'L: STEEL
SCALE: NONE
DRAWING NO.: 37797-58
DWG SIZE: A