MICRO SWITCH
FREEPORT ILLINOIS, U.S.A
A DIVISION OF HONEYWELL
FED. MFG. CODE 91929

SWITCH - BASIC

CATALOG LISTING
17HM5

REPLACES X81843-HM
RELEASE NO. PR-14096
CATALOG LISTING 17HM5
PAGE 1 OF 1
DRAWING NUMBER M
ISSUE 4

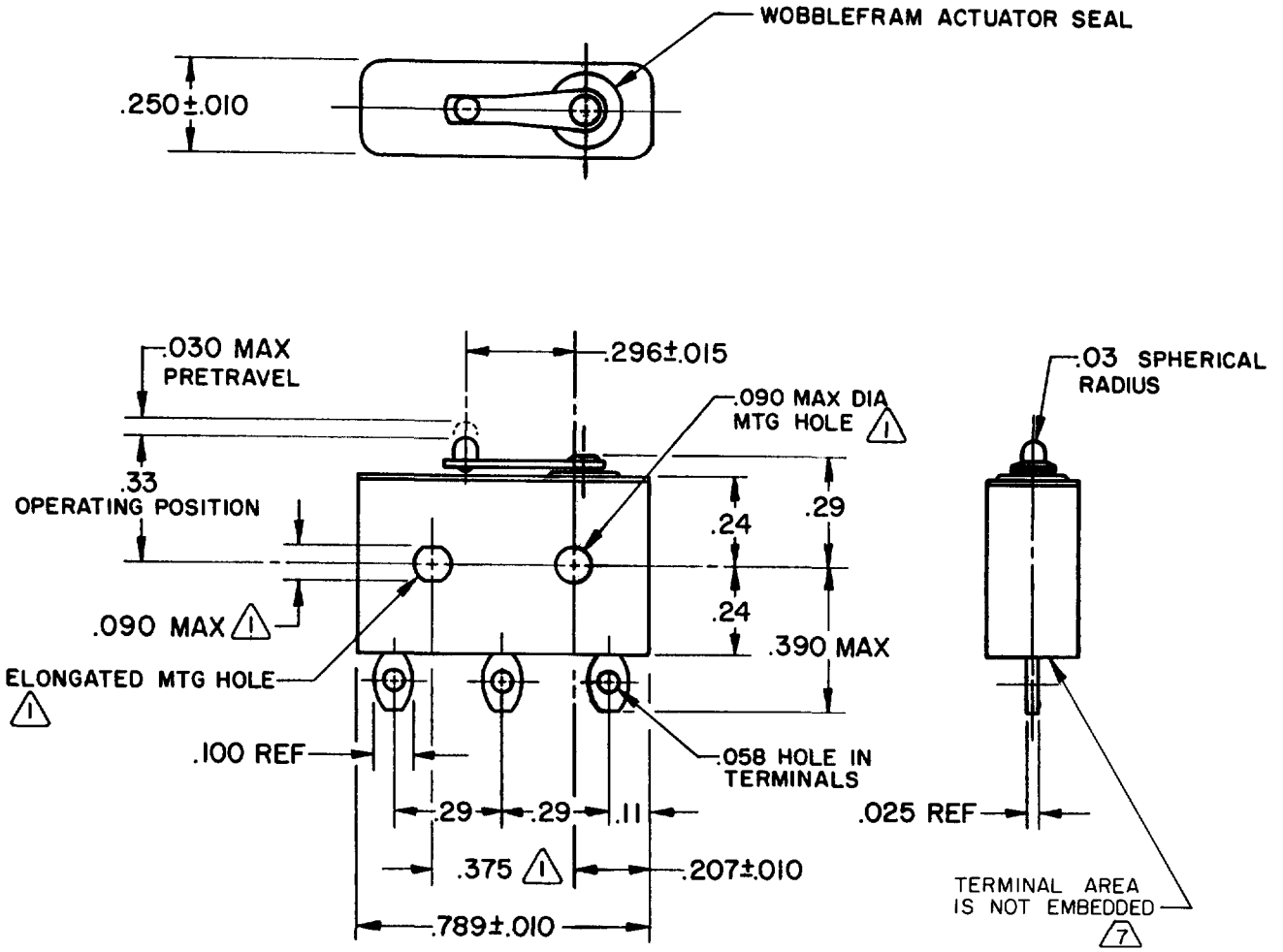

NOTES

1. MOUNTING HOLES WILL ACCEPT PINS OR SCREWS OF .087 MAX DIA ON .375±.002 CENTERS
2 - FOR USE IN TEMPERATURE RANGE -300°F TO +500°F
3 - HERMETICALLY SEALED (METAL-TO-METAL, GLASS-TO-METAL)
4 - ALL EXPOSED PARTS ARE OF CORROSION RESISTANT MATERIALS
5 - DO NOT APPLY MORE THAN 1 1/2 INCH-POUNDS OF TORQUE WHEN TIGHTENING MOUNTING SCREWS
6 - TERMINALS ARE TINNED FOR SOLDERING
7 - GOLD ALLOY STATIONARY CONTACTS
8 - 24K GOLD MOVABLE CONTACT
9. MICRO SWITCH RECOMMENDS POTTING TERMINAL AREA AFTER LEAD WIRES ARE ATTACHED

REVISIONS

A	PR-14096	MAM 19 AUG 85
B	C071228	DAW 29 OCT 91
C	200953	CSL 4 AUG 00

THIS DRAWING COVERS A PROPRIETARY ITEM AND IS THE PROPERTY OF MICRO SWITCH. A DIVISION OF HONEYWELL. THIS DRAWING IS NOT TO BE COPIED OR USED WITHOUT THE APPROVAL OF MICRO SWITCH.

THIRD ANGLE PROJECTION

CHARACTERISTICS

OPERATING FORCE ----- 7 OZ MAX
RELEASE FORCE ------- 1 OZ MIN
DIFFERENTIAL TRAVEL -- .0003 - .0040
OVERTRAVEL ---------- .003 MIN

ELECTRICAL DATA

CONTACT ARRANGEMENT
S P D T

28 VOLTS DC RATING
INDUCTIVE ---- SEA LEVEL - 1/4 AMP
70,000 FT -- 1/4 AMP
RESISTIVE ---- SEA LEVEL -- 1 AMP
70,000 FT --- 1 AMP

SCALE 2 : 1

DO NOT SCALE PRINT

TOLERANCES
APPLY TO DESIGN UNITS. CONVERSIONS ARE ONLY FOR REFERENCE. UNLESS NOTED, TOLERANCES ARE ±

	DIM. mm	TOL. mm/in	DIM. in	TOL. mm/in
NO PLACES	X	1/.04		
ONE PLACE	X.X	0.4/.016	X.X	0.8/.03
TWO PLACES	X.XX	0.15/.006	X.XX	0.38/.015
THREE PLACES			X.XXX	0.13/.005
ANGLES				

SI METRIC ☐ US CUSTOMARY ■
DESIGN UNITS

WEIGHT .014 LB MAX

RASTER
FO-52848-A
DRAWN MAM 19 AUG 84
CHECK
CHECK
CHECK