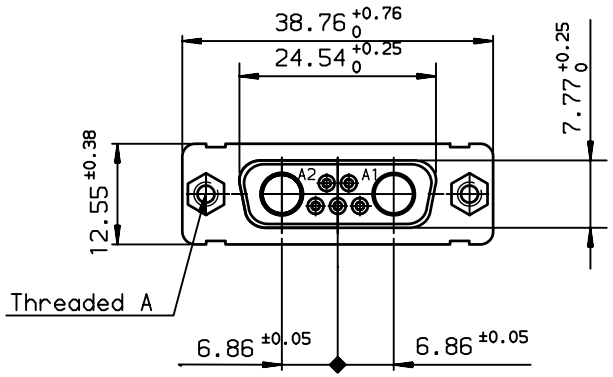

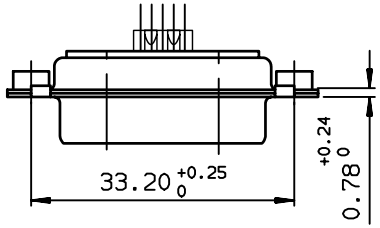

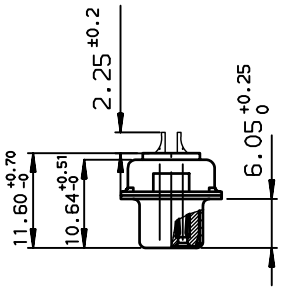

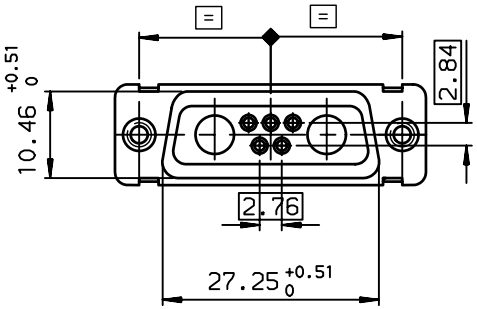

TIN LEAD PART NUMBER

DAL7W2SA00	M3
DA07W2SA00	UNC 4.40
PART NUMBER	Threaded A

LEAD FREE PART NUMBER

DAL7W2SA00LF	M3
DA07W2SA00LF	UNC 4.40
PART NUMBER	Threaded A

GENERAL CHARACTERISTICS AND ROHS INFORMATIONS:
SEE DRAWING C01-8639-0003

European Views

rev	ecn no	dr	date
B	-	DEB	2003/09/29
C	LS05-005	MPE	2005/03/16
D	LS06-005	LGO	2006/06/27
-	-	-	-
-	-	-	-
-	-	-	-
-	-	-	-

www.fciconnect.com

Dr	JARRY	2001/01/03
Eng	PESSON	2001/01/03
Chr	LEGARE	2001/01/03
Appr	LEGARE	2001/01/03

surface ISO 1302 | tolerance std ISO 406 ISO 1101

TOLERANCES UNLESS OTHERWISE SPECIFIED

ANGULAR		LINEAR	
		0.X	±0.1
		0.XX	±0.1
0.XX°	±2°	0.XXX	±0.1

Product family D-SUB

projection | mm

size A3 | Scale 1.5

ECN LS06-0095

Spec ref -

title: SOCKET CONNECTOR MARK 1 FOR POWERS CONTACTS .

dwg no C01-8639-1780 | Rev. D

catalog no -

CUSTOMER | sheet 1 of 1

Copyright FCI.

REV F - 2006-04-17