DWG. NO.	PT-11754
ISSUE	REVISIONS

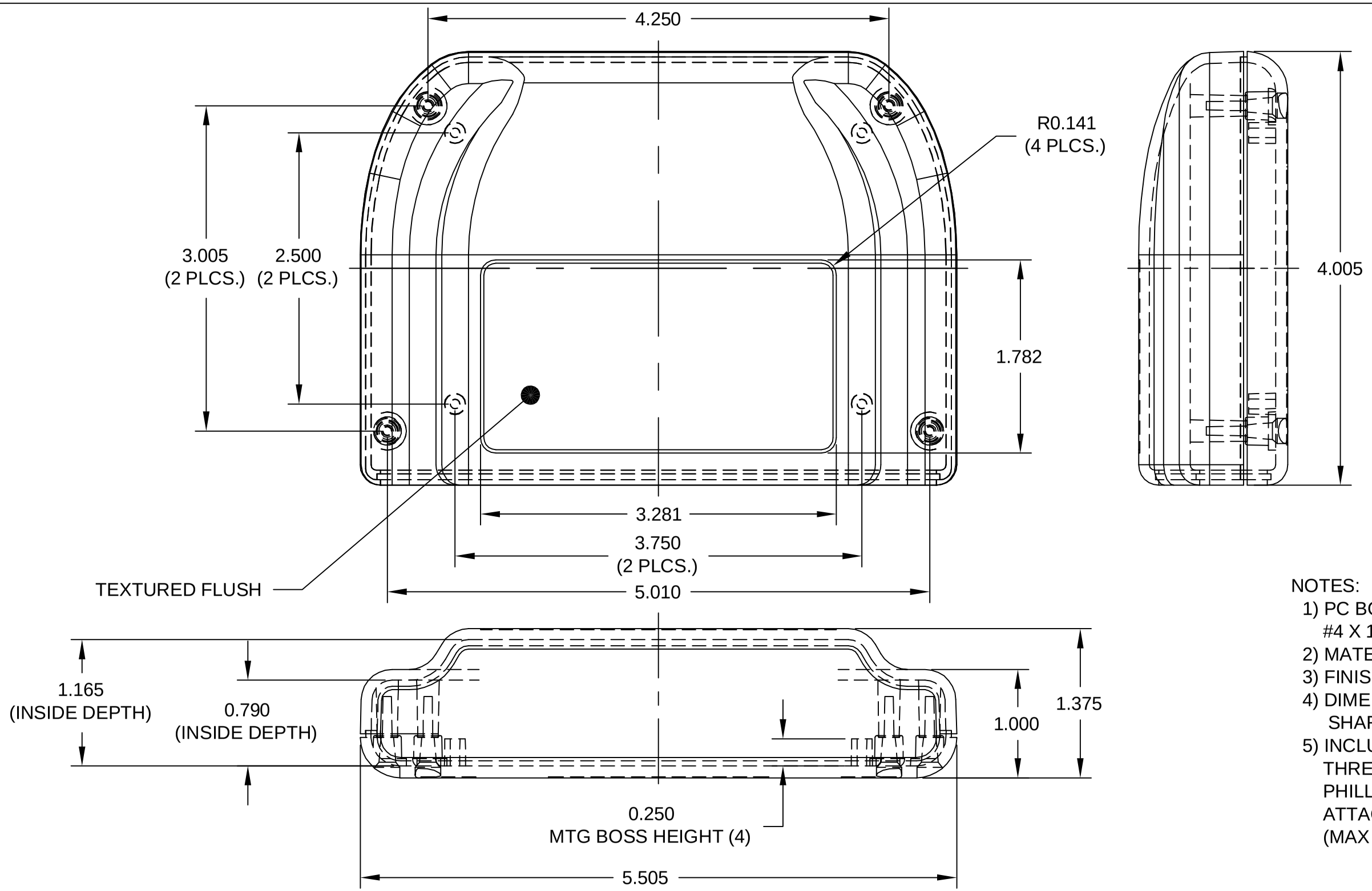

NOTES:

1) PC BOARD BOSSES WILL ACCEPT A #4 X 1/4" THREAD FORMING SCREW
2) MATERIAL: ABS - UL94-5VA
3) FINISH: BLACK TEXTURE
4) DIMENSIONS ARE TO THEORETICAL SHARP CORNERS.
5) INCLUDES (4) #4-24 x 5/8 HI-LOW THREAD FORMING, CSK, OVAL HEAD, PHILLIPS DRIVE SCREWS FOR ATTACHING BODY TO COVER (MAX TORQUE 4.5 IN-LBS)

ITEM	REQ'D.	PART NO.	DESCRIPTION

QTY.	USED ON

TOLERANCES:
±.005 BETWEEN HOLE CENTERS
±.015 FROM SHEARED EDGE
±.032 FROM A BENT SURFACE
±.063 BETWEEN ASSEMBLED SURFACES
UNLESS OTHERWISE SPECIFIED

MAT:	AS NOTED	SCALE:	NAME: PLASTIBOX STYLE I
FINISH:	SEE SPEC.	BUD	
DR. DP	5-23-05	BUD INDUSTRIES, INC.	
CH.		WILLOUGHBY, OHIO	DWG. NO. PT-11754
APP.			