PART NUMBER	POSITION 1	POSITION 2	POSITION 3	POSITION 4
568-2231-1112	RED NON-DIFFUSED	RED NON-DIFFUSED	RED NON-DIFFUSED	RED NON-DIFFUSED
568-2232-2222	GREEN NON-DIFFUSED	GREEN NON-DIFFUSED	GREEN NON-DIFFUSED	GREEN NON-DIFFUSED
568-2233-3332	YELLOW NON-DIFFUSED	YELLOW NON-DIFFUSED	YELLOW NON-DIFFUSED	YELLOW NON-DIFFUSED

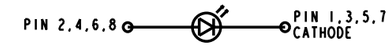

SINGLE COLOR LED SCHEMATIC

REV.	ECN NO.	REVISIONS	DRN.	CKD.	APP.	DATE
A	——	NEW RELEASE	TC			

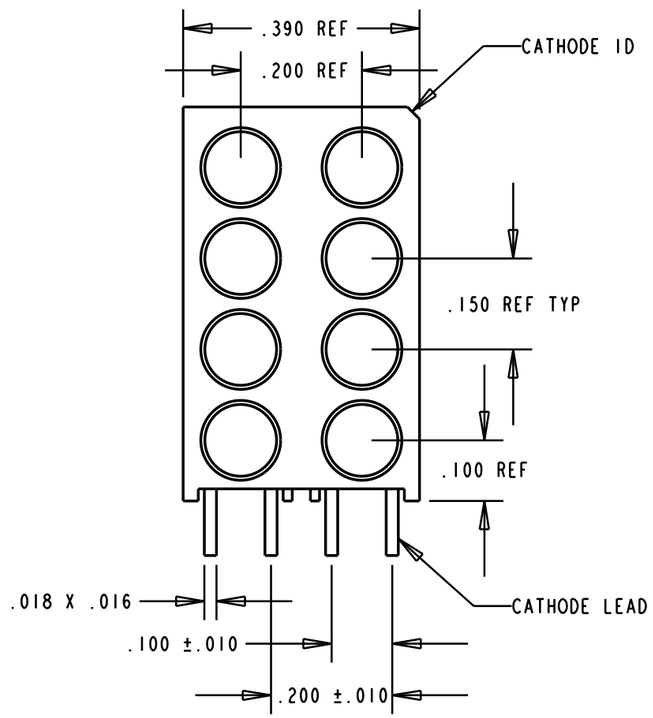

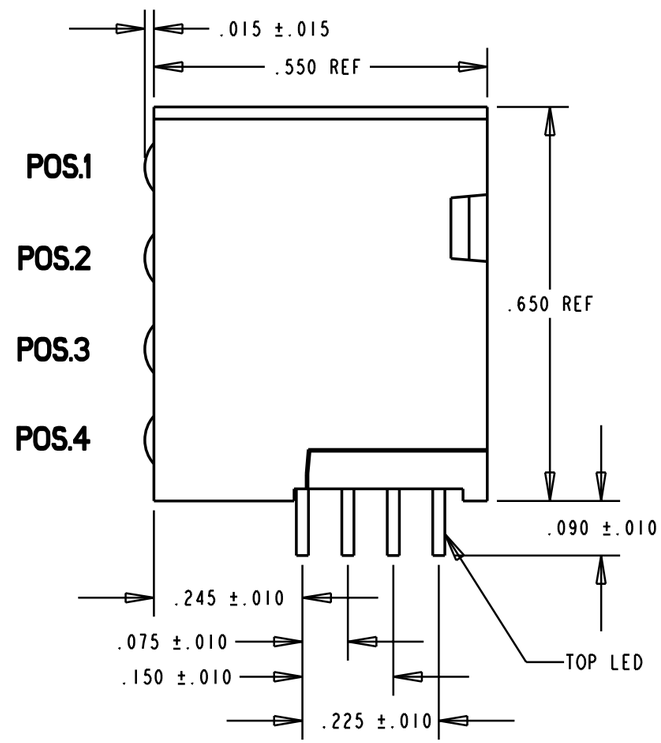

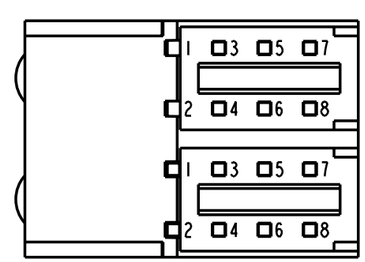

NOTES:

1- LEADS TO FIT INTO HOLES SPACED AS PER HOLE PATTERN
2- LEADS TO BE FREE OF DEFORMATION AFTER BENDING AND CUTTING
3- PIN NUMBERS FOR REFERENCE ONLY, DESIGNATION NON-EXISTENT ON PART
4- LED LEAD DIMENSIONS SHOWN ARE MEASURED AT HOUSING EXIT
5- PACKAGING =
   BLOCKS ARE PLACED IN CLEAR ANTISTATIC TRAY
   100 BLOCKS PER TRAY
6- DIALIGHT PART NUMBER: 568-223X-XXX2

OPERATING CHARACTERISTICS AT 25°C AMBIENT						
CHARACTERISTICS	LED COLOR	MIN	TYP	MAX	UNITS	TEST CONDITIONS
LUMINOUS INTENSITY	RED	8.7	29		mcd	I F = 10 mA
	GREEN	32	50			
	YELLOW	10		50		
FORWARD VOLTAGE	RED		2.0	2.8	V	I F = 20 mA
	GREEN		2.1	2.8		
	YELLOW		2.1	2.8		
REVERSE CURRENT	ALL		100		µA	V R = 5 V
PEAK WAVELENGTH	RED		635		nm	
	GREEN		565			
	YELLOW		585			
VIEWING ANGLE	ALL		45		Degree	
CAPACITANCE	RED		20		pf	V F=0, f=1MHz
	GREEN		35			
	YELLOW		15			

RECOMMENDED HOLE PATTERN

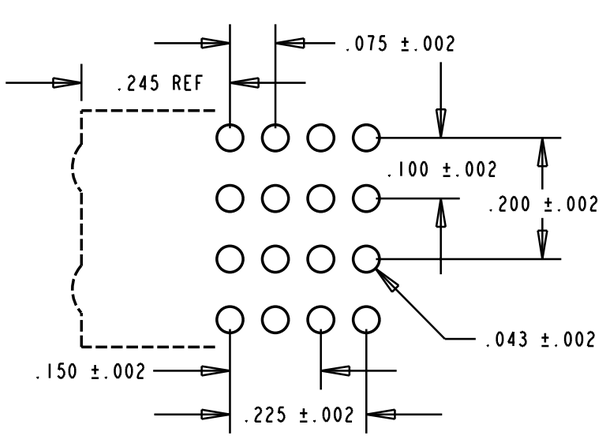

ABSOLUTE MAXIMUM RATING AT 25°C AMBIENT	UNITS	RED	GREEN	YELLOW
POWER DISSIPATION	mW	100	100	60
DERATE LINEARLY FROM 50°C	mA/°C	0.4	0.4	0.25
CONTINUOUS FORWARD CURRENT	mA	30	30	20
PEAK FORWARD CURRENT (1/10 DUTY CYCLE, 0.1 ms PULSE WIDTH)	mA	120	120	80
LEAD SOLDERING TEMPERATURE, 5 SEC., 1/16" FROM BODY	°C	260	260	260
OPERATING TEMPERATURE	°C	-55 TO +100	-55 TO +100	-55 TO +100
STORAGE TEMPERATURE	°C	-55 TO +100	-55 TO +100	-55 TO +100

THIS DRAWING AND THE CONTENTS HEREIN ARE CONFIDENTIAL AND THE SOLE PROPERTY OF DIALIGHT. REPRODUCTION OF THIS DRAWING OR CONSTRUCTION OF ANY PARTS WITHIN THIS DRAWING ARE FORBIDDEN WITHOUT THE WRITTEN CONSENT OF DIALIGHT.

SCALE 4:1
ALL DIM'S IN: INCHES
TOLERANCES:
UNLESS OTHERWISE SPECIFIED
FRACTIONS: ±1/64
DECIMALS (.XX): ±.020
DECIMALS (.XXX): ±.015
DECIMALS (.XXXX):
ANGLES: ±1°
FINISH:
FSCM 83330

DRAWING NUMBER C-16596
REV A
TITLE 4X2 CBI ARRAY BLOCK
MATERIAL

Dialight
1913 ATLANTIC AVE.
MANASQUAN, N.J. 08736

SHEET OF
FAMILY TABLE: