MODEL APD-240M021
Plasma Panel Display Modules

240 Character Display with Drive Electronics Controller and Parallel Interface

The APD-240M021 plasma display module consists of a multiplexed DC plasma display, drive circuitry and switching voltage converter mated with an intelligent, microprocessor-based controller board. The resulting assembly interfaces easily to microprocessor-based systems and requires only readily available low voltages for power. Dale's® patented open construction display technology assures a stable flicker free screen.

Interfacing is a basic 8 bit parallel ASCII interface with some dedicated control lines and requires minimum handshaking. DEVICE SELECT (CS), ADDRESS (A_0), WRITE and READ lines are enabled in accordance with the Function Summary Chart and allow the host system to write or read data from the display. Data bus signals are formatted in accordance with the standard ASCII which allow control functions to be included in the character code matrix table. Functions such as advancing the cursor position or selecting the end-of-line mode are implemented with a single 8 bit control word.

STANDARD ELECTRICAL SPECIFICATIONS

	MIN.	TYP.	MAX.	UNITS
Logic Supply Voltage	+ 4.75	+ 5.0	+ 5.25	V
Logic Supply Current	—	300.0	—	mA
Panel Supply Voltage	11.5	12.0	30.0	V
Panel Supply Current*	—	600.0	1000.0	mA
Logic One Voltage	2.4	—	—	V
Logic Zero Voltage	—	—	.8	V
Logic Zero Input Current	—	—	-.4	mA

* At 12 volt input.

DIMENSIONAL CONFIGURATIONS

[Numbers in brackets indicate millimeters]

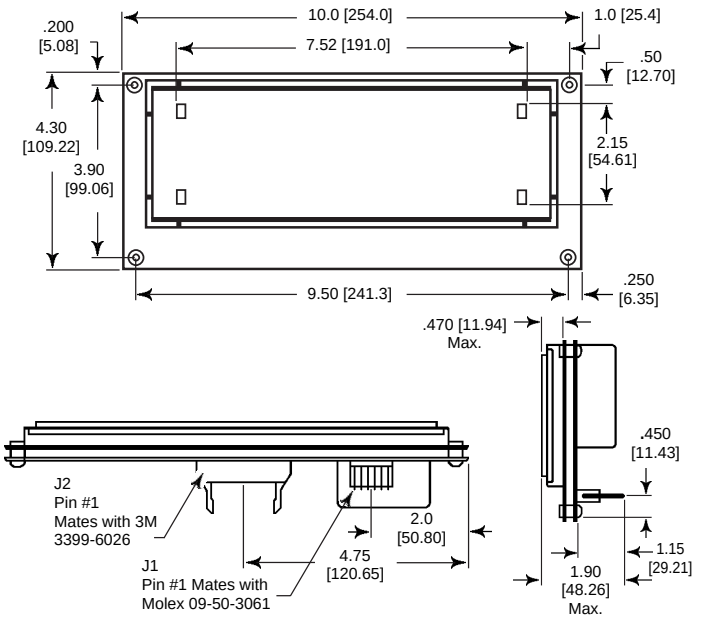

FEATURES

- 240 (6 x 40) alphanumeric characters (5 x 7 dot matrix)
- Compatible with IEE 3402-08-240N
- Only + 5 and + 11.5 to 30.0 VDC required
- ASCII character set (optional character sets available)
- Efficient parallel interface
- Wide viewing angle (150°)
- Rugged design/slim profile
- Flicker free refresh
- Editing functions
- High brightness

OPTICAL SPECIFICATIONS

Viewing Area: 7.52" [191.01mm] W x 2.15" [54.61mm] H.

Number of Characters: 240.

Character Size: 0.15" [3.81mm] W x 0.21" [5.33mm] H.

Luminance: 100 foot lamberts.

ORDERING INFORMATION

DESCRIPTION	PART NUMBER
Display, Drive Electronics, Controller	APD-240M021
Parallel Data Connector Kit	280105-01
Power Connector Kit	280108-07
Non-Glare Filter (amber circular polarized) - other filters available - contact factory	280109-13