Feb.1.2018 Copyright 2018 HIROSE ELECTRIC CO., LTD. All Rights Reserved.

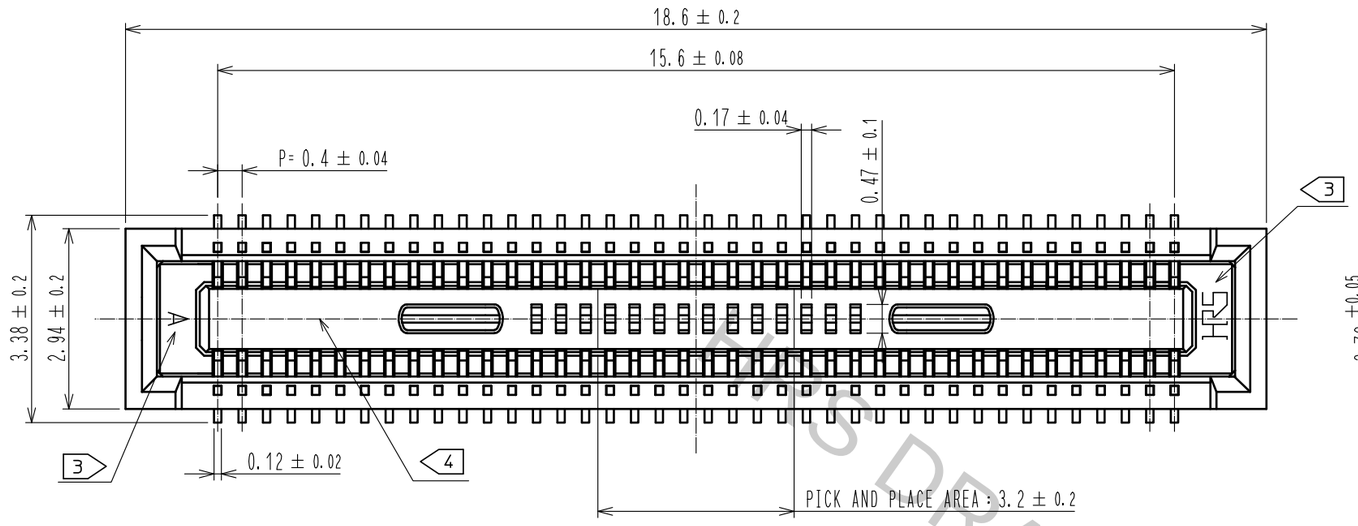

RECOMMENDED PATTERN

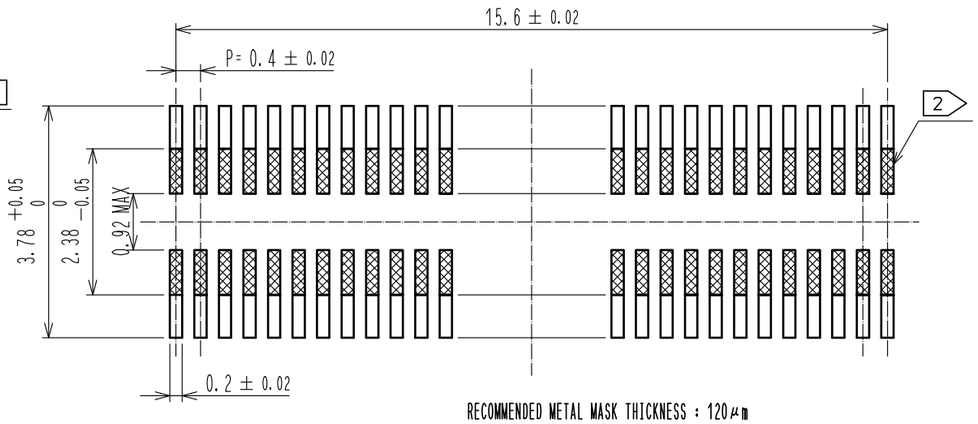

RECOMMENDED METAL MASK THICKNESS : 120μm
RECOMMENDED METAL MASK OPENING RATIO : 80% FOR LEAD PAD

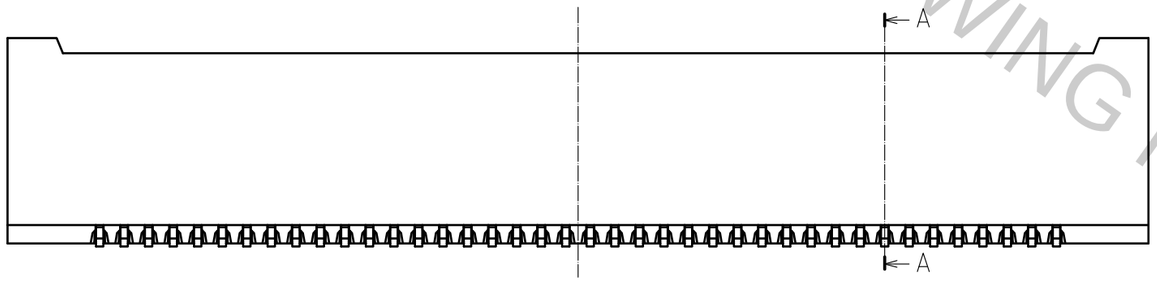

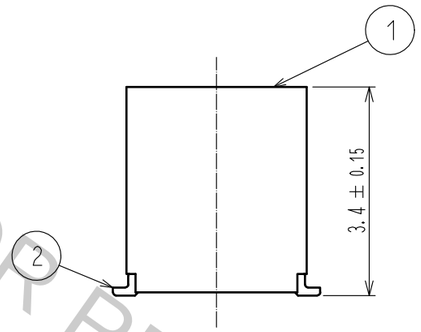

A-A(20:1)

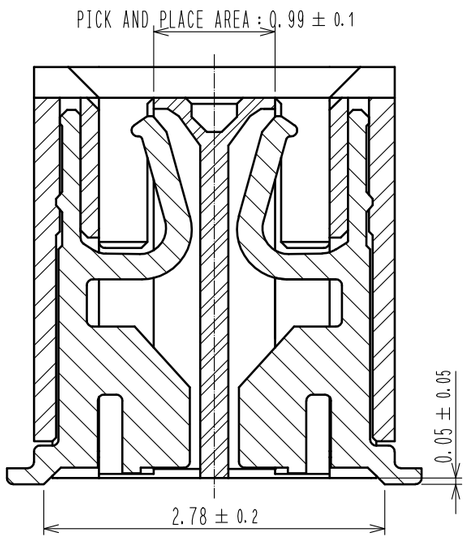

ENGAGEMENT FIGURE(20:1)

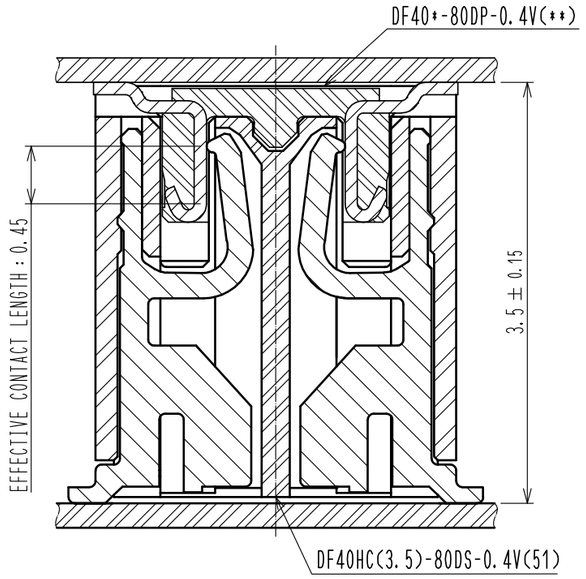

NOTES 1. ALL LEADS AND REINFORCED METAL FITTINGS CO-PLANARITY SHALL BE 0.1mm MAX.
2 ▨ IS NO PATTERN AREA OTHER THAN THE SAME CIRCUIT.
3 HRS MARK AND CAV NO. IS INDICATED IN APPROXIMAL POSITION SHOWN.
4 GATE POSITION IS POSITIONED IN APPROXIMAL AREA SHOWN.

NO.	MATERIAL	FINISH , REMARKS	NO.	MATERIAL	FINISH , REMARKS
2	PHOSPHOR BRONZE	CONTACT AREA:Au 0.05μm MIN SMT LEAD:Au 0.05μm MIN UNDERPLATING:NICKEL 1μm MIN	6	PS	CLEAR, REINFORCEMENT COLLAR
			5	PS	BLACK, PLASTIC REEL
			4	POLYESTER	CLEAR, COVER TAPE
1	LCP	BLACK, UL94V-0	3	PS	CLEAR, EMBOSSED CARRIER TAPE

UNITS mm	SCALE 10 : 1	COUNT	DESCRIPTION OF REVISIONS	DESIGNED	CHECKED	DATE
		0				

HRS HIROSE ELECTRIC CO., LTD.

APPROVED	: MO. ISHIDA	15.07.15	DRAWING NO.	EDC-337747-51-01
CHECKED	: TS. MIYAZAKI	15.07.15	PART NO.	DF40HC(3.5)-80DS-0.4V(51)
DESIGNED	: SH. HOSODA	15.07.15	CODE NO.	CL684-4162-7-51
DRAWN	: KR. AJITO	15.07.15		0 1/2

THIS DRAWING FOR REFERENCE

Feb.1.2018 Copyright 2018 HIROSE ELECTRIC CO., LTD. All Rights Reserved.

EMBOSSED CARRIER TAPE PACKING(FREE)

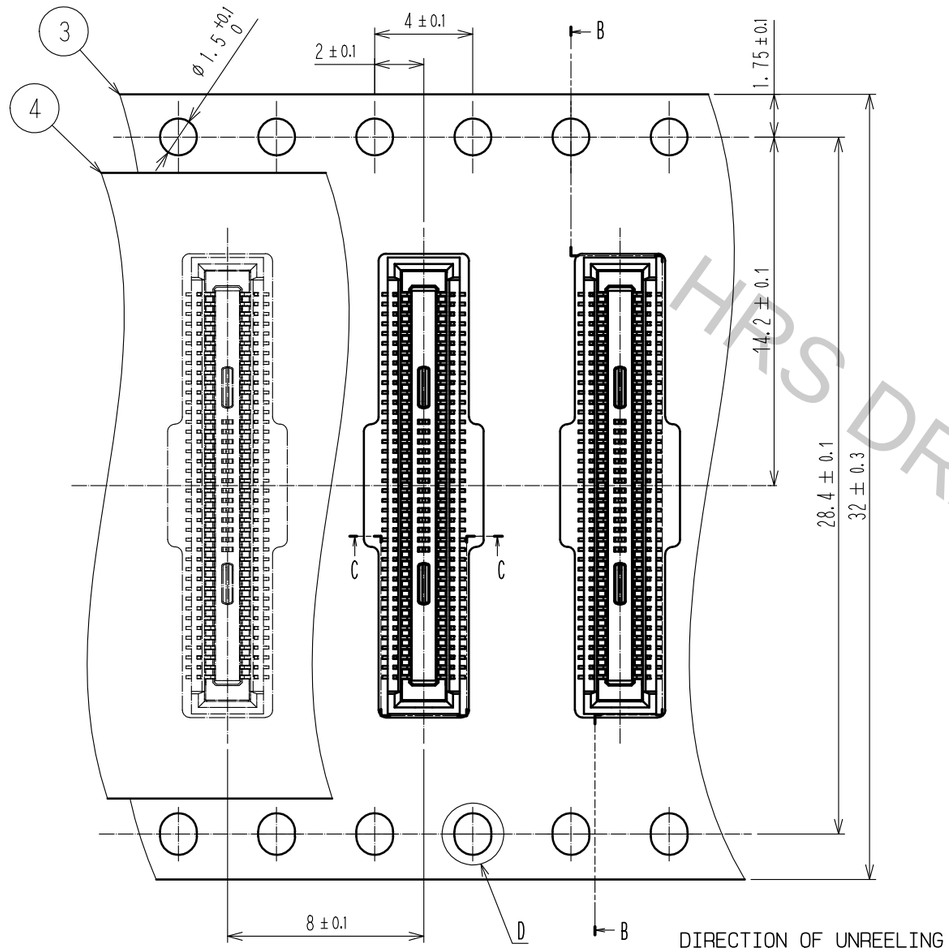

B-B

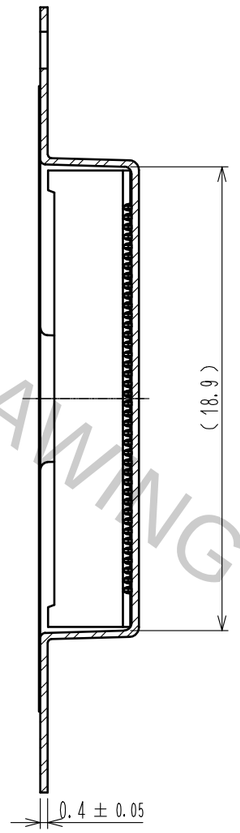

STYLE AND DIMENSION OF REEL(FREE)

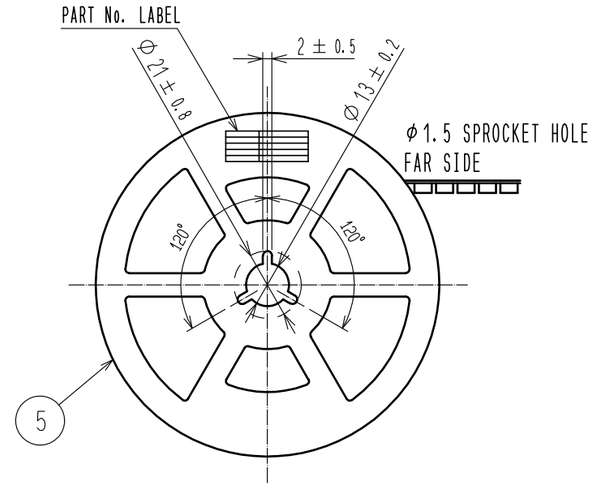

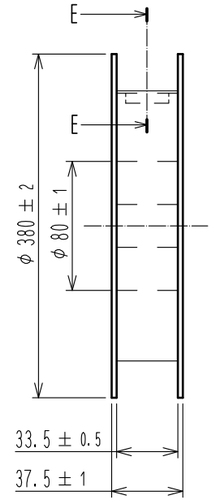

8 DETAIL OF PART No. LABEL

製造年月日	** ** **
製品コード	CL684-4162-7-51
製品名	DF40HC(3.5)-80DS-0.4V(51)
数量	4000
納入者	ヒロセ電機(株)

E-E(FREE)

9 REINFORCEMENT COLLAR

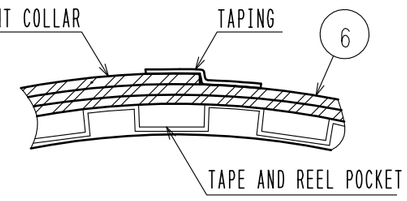

C-C

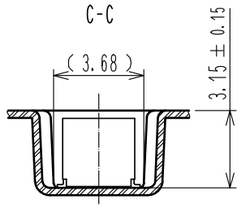

D(10:1)

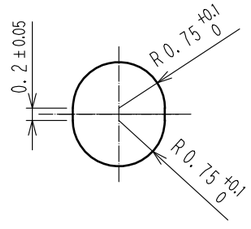

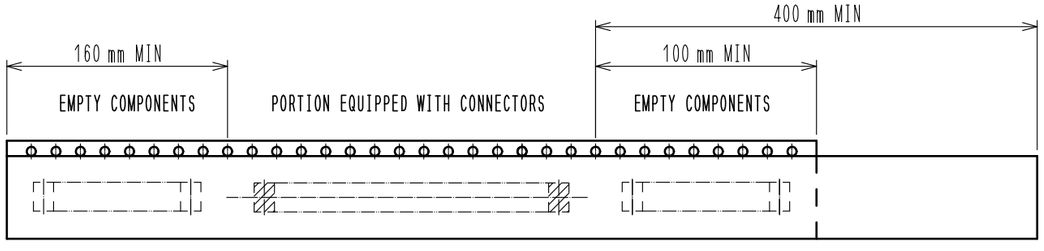

NOTES 5. PER REEL 4000 CONNECTORS.
6. THE DIMENSIONS IN PARENTHESES ARE FOR REFERENCE.
7 REFER TO JIS C 0806, IEC 60286-3
(PACKING OF COMPONENTS FOR AUTOMATIC HANDLING)
8 DETAIL OF PART No. LABEL IS WRITTEN IN JAPANESE.
PART NO. LABEL DESCRIBS THE FOLLOWING INFORMATION FROM TOP.
PRODUCTION DATE:
PRODUCT CODE: CL684-4162-7-51
PART NUMBER: DF40HC(3.5)-80DS-0.4V(51)
NUMBER OF PIECES: 4000 PIECES
SUPPLIER NAME: HIROSE ELECTRIC CO., LTD.
9 AFTER PACKAGING, ROLL 2 METERS OF THE REINFORCEMENT COLLAR TO OUTER CIRCUMFERENCE OF TAPE AND REEL POCKET, AND TAPE DOWN AT THE END THE COLLAR.

HRS DRAWING FOR REFERENCE

HRS	DRAWING NO.	EDC-337747-51-01
	PART NO.	DF40HC(3.5)-80DS-0.4V(51)
	CODE NO.	CL684-4162-7-51

0 2/2