THIS DRAWING IS UNPUBLISHED. RELEASED FOR PUBLICATION 1997
© COPYRIGHT 1997 BY - ALL RIGHTS RESERVED.

REVISIONS

P	LTR	DESCRIPTION	DATE	DWN	APVD
	A12	ECR-14-013729	20SEP2014	RK	MKO

PN 0-2, 0-7, 0-8,
1-0, 1-1, 1-2 ,1-3 & 0-4

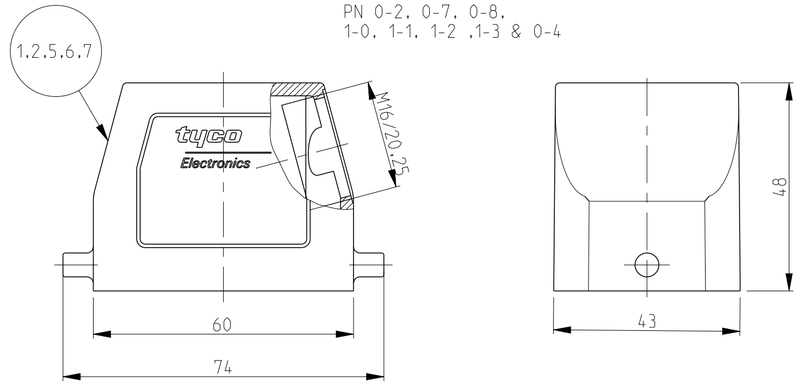

PN 0-1,0-9,1-7 & 0-3

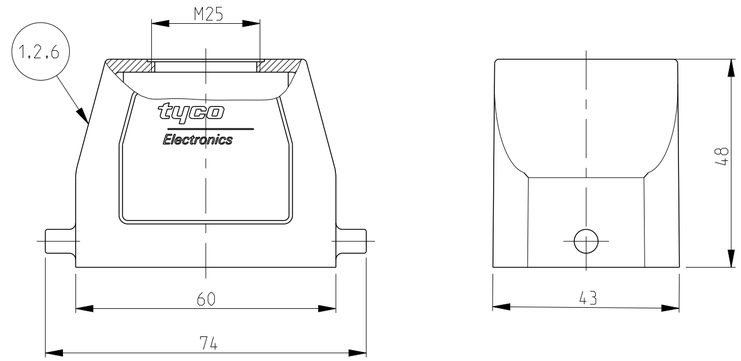

PN 1-5; 1-8

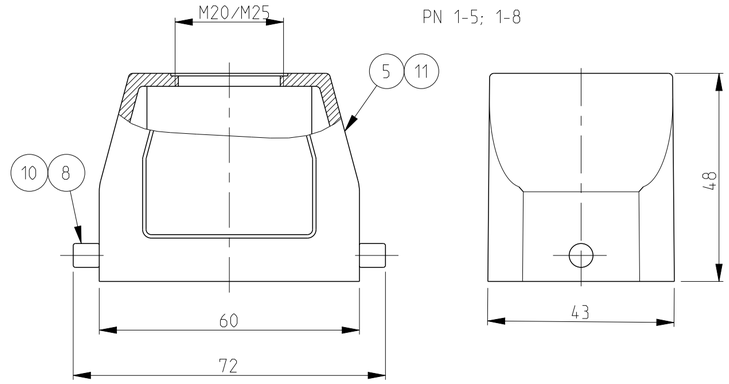

PN 0-5 & 0-6

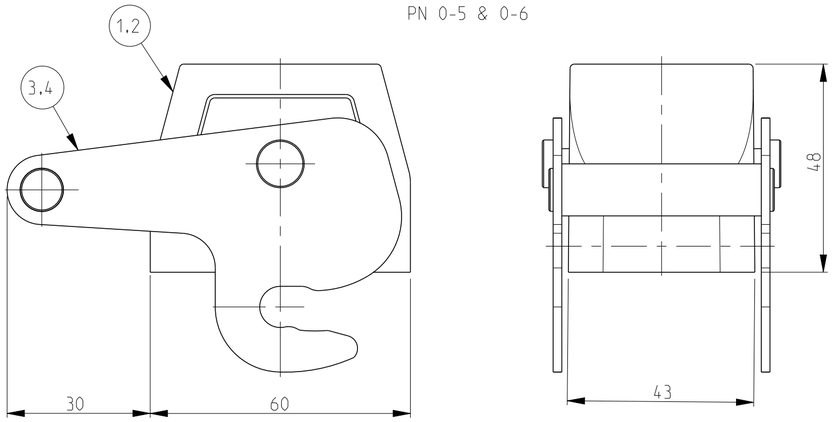

PN 1-4 & 1-6

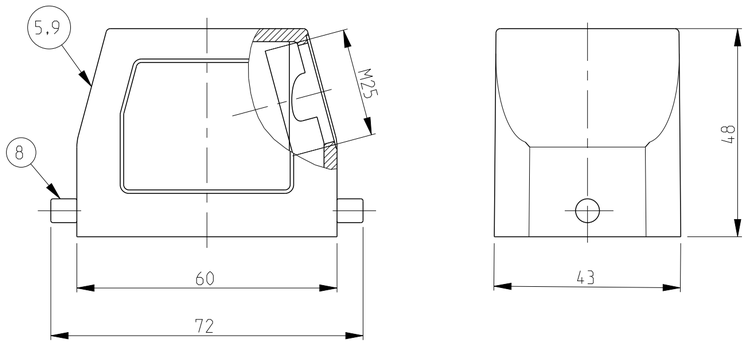

Notes

1 Material:Housing: Aluminium diecasting alloy

2 Surface:-Powder varnish-grey
-Aluminium oxide+varnish black
-chromit AL TCP passivation
+varnish black

3 Varnish on the inside not necessary

4 Packaging
Packaging quantity: 5 pieces in a box

PN 0-1,0-9,1-7 & 0-3	PN 0-2,0-7,0-8, 1-0,1-1,1-2,1-3 & 0-4	PN 0-5 & 0-6	PN 1-4 & 1-6	PN 1-5 & 1-8
	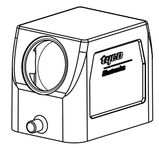	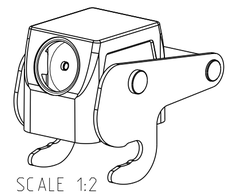	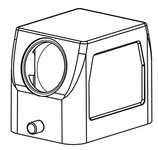	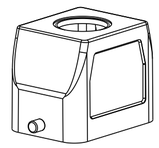
SCALE 1:2	SCALE 1:2	SCALE 1:2	SCALE 1:2	SCALE 1:2

1-8	1-7	1-6	1-5	1-4	1-3	1-2	1-1	1-0	0-9	0-8	0-7	0-6	0-5	0-4	0-3	0-2	0-1	DESCRIPTION	MATERIAL	SURFACE	COLOR	ITEM NO	NOTES
																		Hood HB-K	Aluminium	Aluminium oxide	Black	11	
																		LB-Clip bolt	Stainless steel			10	
		1																Hood HB	Aluminium		Knows RAL 9010	9	Without TE logo
		2	2	2														LB-Clip bolt	Steel	Zinc plated	Blue	8	
					1													Hood HB	Aluminium		Fire red RAL3000	7	
	1					1												Hood HB-EMV	Aluminium	SEE NOTE 2	Black	6	
			1	1			1											Hood HB	Aluminium		Grey	5	Without TE logo
													1					ZB-Locking clip	Stainless steel	Blank		4	
												1						ZB-Locking clip	steel	Zinc plated	Blue	3	
													1	1	1			Hood HB-K	Aluminium	Aluminium oxide	Black	2	
								1	1	1	1	1				1	1	Hood HB	Aluminium		Grey	1	
HB-K.6.STO.1.M20.G	HB-EMV.6.STO.1.M25.G	HB.6.STS.1.M25.G	HB.6.STO.1.M25.G	HB.6.STS.1.M25.G	HB.6.STS.1.M20.G.not	HB-EMV.6.STS.1.M25.G	HB.6.STS.1.M25.G	HB.6.STS.1.M25.G.KM	HB.6.STO.1.M25.G.KM	HB.6.STS.1.M16.G	HB.6.STS.1.M20.G	HB-Z.6.STS-ZB.1.M25.G	HB-K/Z.6.STS-ZB.1.M25.G	HB-K.6.STS.1.M25.G	HB-K.6.STO.1.M25.G	HB.6.STS.1.M25.G	HB.6.STO.1.M25.G						

THIS DRAWING IS A CONTROLLED DOCUMENT.

DIMENSIONS: mm

TOLERANCES UNLESS OTHERWISE SPECIFIED:
n.ISO 8015:
n.ISO 2768-mH-E:
n.DIN 16901-120
0 PLC ±
1 PLC ±
2 PLC ±
3 PLC ±
4 PLC ±
ANGLES ±

MATERIAL -
-

FINISH -
-

DWN Schneider 28.11.02
CHK Schweiger 28.11.02
APVD -
PRODUCT SPEC 108-74001/74003
APPLICATION SPEC 114-74001/74004/74005
WEIGHT -

TE Connectivity

NAME HOOD HB6
-

SIZE A2 | CAGE CODE 00779 | DRAWING NO C-1106419 | RESTRICTED TO -

CUSTOMER DRAWING | SCALE 1:1 | SHEET 1 OF 1 | REV A12

1471-9 (3/13)