POSITIONS/ CONTACTS	A		B	
	INCH±.008	MM±0.20	INCH±.012	MM±0.30
02/02	0.050	1.27	0.116	2.94
03/03	0.100	2.54	0.166	4.21
04/04	0.150	3.81	0.216	5.48
05/05	0.200	5.08	0.266	6.75
06/06	0.250	6.35	0.316	8.02
07/07	0.300	7.62	0.366	9.29
08/08	0.350	8.89	0.416	10.56
09/09	0.400	10.16	0.466	11.83
10/10	0.450	11.43	0.516	13.10
11/11	0.500	12.70	0.566	14.37
12/12	0.550	13.97	0.616	15.64
13/13	0.600	15.24	0.666	16.91
14/14	0.650	16.51	0.716	18.18
15/15	0.700	17.78	0.766	19.45
16/16	0.750	19.05	0.816	20.72
17/17	0.800	20.32	0.866	21.99
18/18	0.850	21.59	0.916	23.26
19/19	0.900	22.86	0.966	24.53
20/20	0.950	24.13	1.016	25.80
21/21	1.000	25.40	1.066	27.07
22/22	1.050	26.67	1.116	28.34
23/23	1.100	27.94	1.166	29.61
24/24	1.150	29.21	1.216	30.88
25/25	1.200	30.48	1.266	32.15
26/26	1.250	31.75	1.316	33.42
27/27	1.300	33.02	1.366	34.69
28/28	1.350	34.29	1.416	35.96
29/29	1.400	35.56	1.466	37.23
30/30	1.450	36.83	1.516	38.50
31/31	1.500	38.10	1.566	39.77
32/32	1.550	39.37	1.616	41.04
33/33	1.600	40.64	1.666	42.31
34/34	1.650	41.91	1.716	43.58
35/35	1.700	43.18	1.766	44.85
36/36	1.750	44.45	1.816	46.12
37/37	1.800	45.72	1.866	47.39
38/38	1.850	46.99	1.916	48.66
39/39	1.900	48.26	1.966	49.93
40/40	1.950	49.53	2.016	51.20
41/41	2.000	50.80	2.066	52.47
42/42	2.050	52.07	2.116	53.74
43/43	2.100	53.34	2.166	55.01
44/44	2.150	54.61	2.216	56.28
45/45	2.200	55.88	2.266	57.55
46/46	2.250	57.15	2.316	58.82
47/47	2.300	58.42	2.366	60.09
48/48	2.350	59.69	2.416	61.36
49/49	2.400	60.96	2.466	62.63
50/50	2.450	62.23	2.516	63.90

PART NUMBER CODING
LPPB_ _1NFFN-RC

NUMBER OF POSITIONS

(CONTACTS PER ROW, 02 THRU 50)

REVISIONS				
REV.	ECO. NO	DESCRIPTION	DATE	BY
C	1900	UPDATE DRAWING VIEWS, POSI. CHART, NOTES & TOLERANCE BLOCK, BODY WIDTH 2.20 WAS 2.14	1/20/09	JH
D	2055	UPDATE CONTACT POINT DISTANCE TO 2.05mm (WAS 2.65), PIN WIDTH 0.40mm (WAS 0.50), PCB HOLE SIZE ∅0.60mm (WAS ∅0.70)	11/10/09	LH
E	2164	CORRECT TOP VIEW AND ISO VIEW	07/28/2010	LH
F	2517	ADD NOTE 10 FOR MATING POST SIZE	2/13/2012	JH

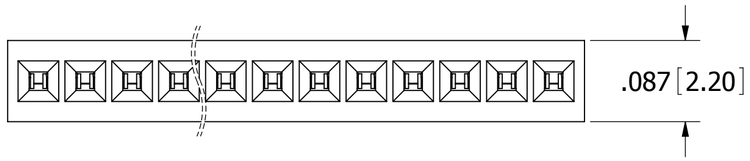

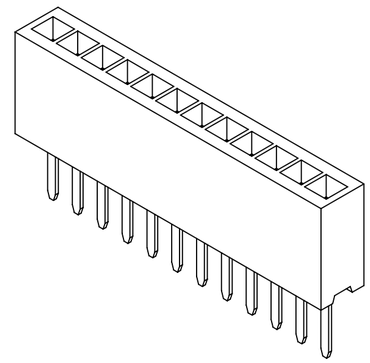

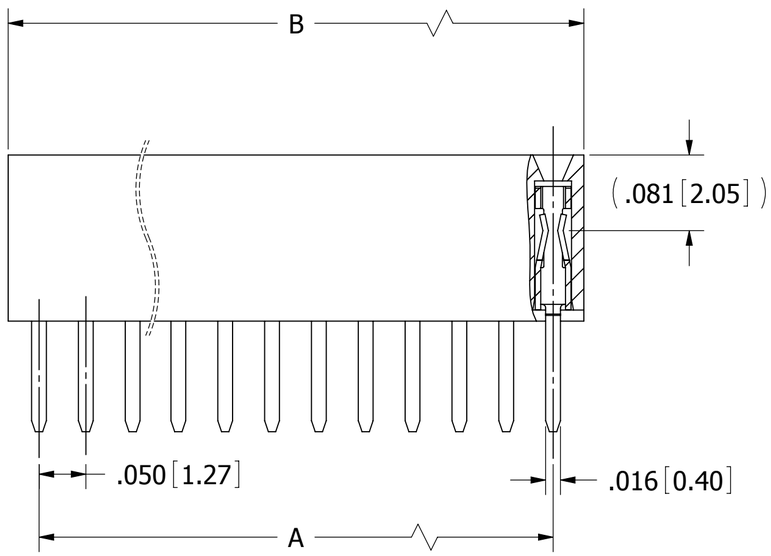

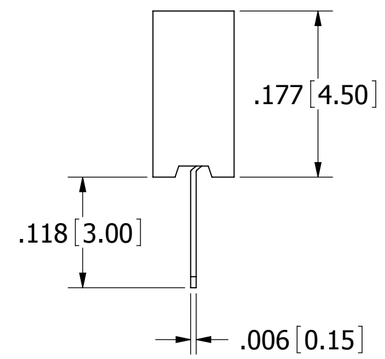

02-20, 0.20mm MAX.
21-50, 0.30mm MAX.

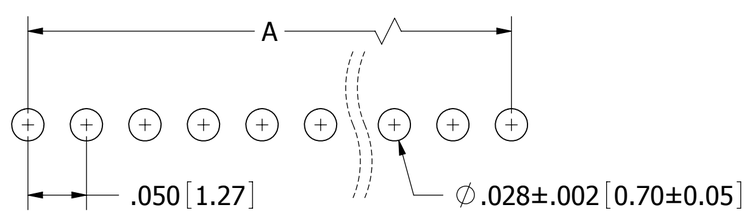

RECOMMENDED PCB HOLE LAYOUT

NOTES:
1. INSULATOR MATERIAL: L.C.P.
   *PROCESSING TEMPERATURE = 260° C FOR 10 SEC.
2. CONTACT MATERIAL: PHOSPHOR BRONZE.
3. PLATING: GOLD FLASH OVERALL.
4. OPERATING TEMPERATURE: -40°C TO +105° C.
5. INSULATION RESISTANCE: 5000 MEGA OHMS MIN.
6. CONTACT RESISTANCE: 20 MILLI OHMS MAX.
7. DIELECTRIC WITHSTANDING: 500V AC.
8. UL FLAMMABILITY RATING: 94V-0.
9. CURRENT RATING: 1 AMP.
10. MATES WITH SULLINS .050 [1.27] CONTACT CENTER MALE HEADER SERIES. (.016 [0.40] SQUARE POSTS)

*INDICATED TEMPERATURE AND TIME IS FOR COMPONENT INSULATOR. HIGHER PROCESSING TEMPERATURES MAY BE USED, PROVIDED HEAT IS APPLIED FROM BACK SIDE OF PCB, AND INSULATOR DOES NOT EXCEED INDICATED TEMPERATURE AND TIME.

RoHS COMPLIANT

UNLESS OTHERWISE SPECIFIED: DIMENSIONS ARE IN INCHES [MM]

TOLERANCES:

ANGULAR: ± 1°

DECIMALS
.XX= ± .012 [.3]
.XXX= ± .008 [.20]
.XXXX= ± .0010 [.100]

DRAWN	DATE	NAME
	01/20/2009	JH

THE INFORMATION HEREIN CONTAINS PROPIETARY INFORMATION OF SULLINS ELECTRONICS AND IS NOT TO BE REPRODUCED, USED OR DISCLOSED TO OTHERS FOR ANY PURPOSE EXCEPT AS SPECIFICALLY AUTHORIZED IN WRITING BY AN OFFICER OF SULLINS ELECTRONICS.

SULLINS CONNECTOR SOLUTIONS

TITLE: .050" SINGLE ROW FEMALE HEADER, ST

PART NUMBER: LPPB_ _1NFFN-RC

SIZE	CAGE CODE	DWG. NO.	REV
C	54453	10955	F

SCALE: 8:1 | SHEET 1 OF 1

FILE NAME: 10955, LPPB_ _1NFFN-RC