ISS.	DATE	E.C.N.	DESCRIPTION
3	13-June-07	05/07/1206	TOLERANCE CORRECTIONS
4	21-May-08	04/08/1220	CUT OUT IN BASE REMOVED. Ø14,3 CLEARANCE ADDED. POSITION REF. C3

© 2008 CARCLO

ALL DIMENSIONS IN mm

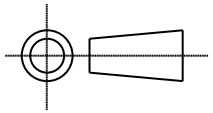

CUSTOMER DRAWING

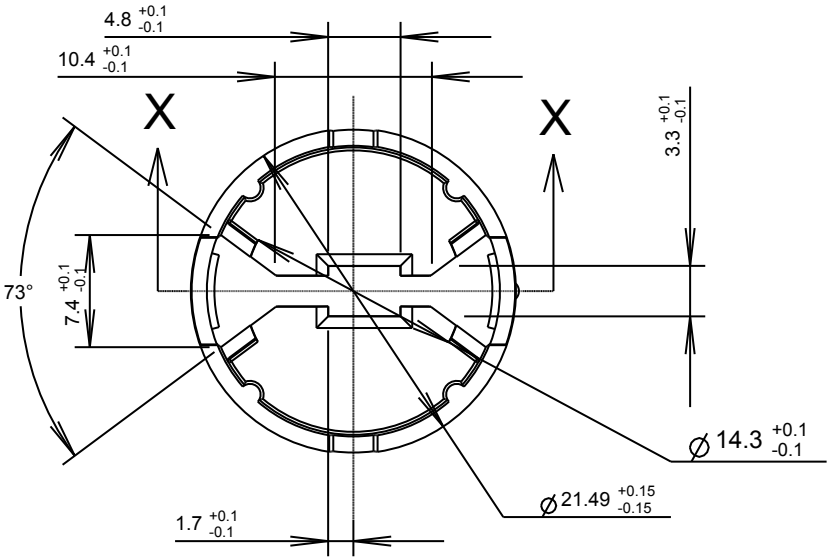

SECTION Y-Y

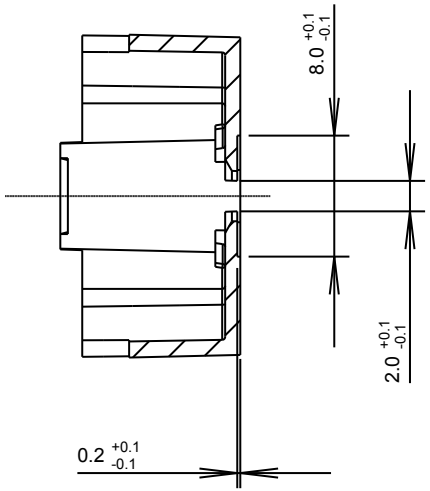

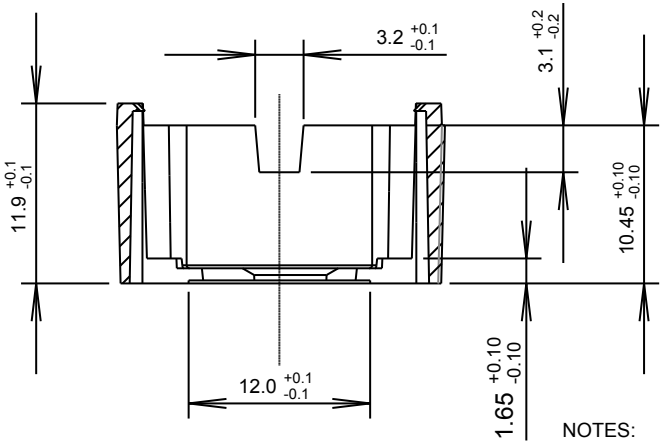

SECTION X-X

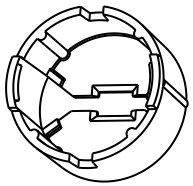

3D GENERAL VIEW
SCALE 1:1

NOTES:
1.MATERIAL: POLYCARBONATE
2. GENERAL WALL THICKNESS 1mm

PART No.	DESCRIPTION
10235	BLACK
10236	WHITE
10237	CLEAR

carclo technical plastics

CARCLO TECHNICAL PLASTICS (SLOUGH)
111 BUCKINGHAM AVE, SLOUGH
SL1 4PF, ENGLAND
TEL: +44 1753 575011 FAX: +44 1753 811359
e-mail: design@carclo-optics.com}

GENERAL TOLERANCES (UNLESS STATED)

LINEAR		ANGULAR	
X	+/- 0.25	X	+/- 1°
X.X	+/- 0.1	X.X	+/- 0.5°
X.XX	+/- 0.05	X.XX	+/- 0.1°

CUSTOMER: CARCLO

TITLE: 20MM DIA LED OPTIC HOLDER FOR LUXEON REBEL

DRAWN	AJD	DATE	15-Feb-07
CHK'D	MK	DATE	13-June-07
APP'D		DATE	

SCALE	CARCLO PART No.
2:1	SEE TABLE

SIZE	CARCLO DRG. No.	SHEET
A4	60459	1 OF 1