THIS DRAWING IS UNPUBLISHED. RELEASED FOR PUBLICATION JUN ,2005.
© COPYRIGHT 2005 By – ALL RIGHTS RESERVED.

LOC	DIST
J	—

REVISIONS 変更

P	LTR	DESCRIPTION	DATE	DWN	APVD
	H	PER ECR-14-006136	25APR2014	HS	FY

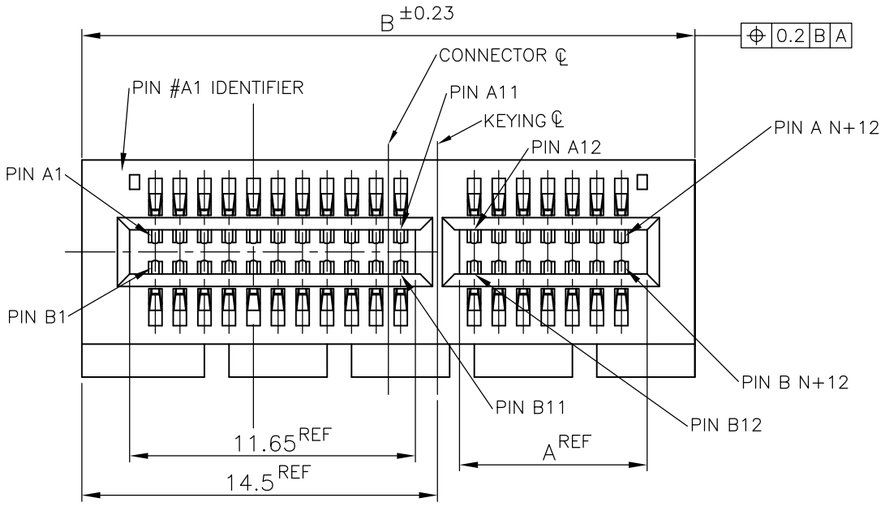

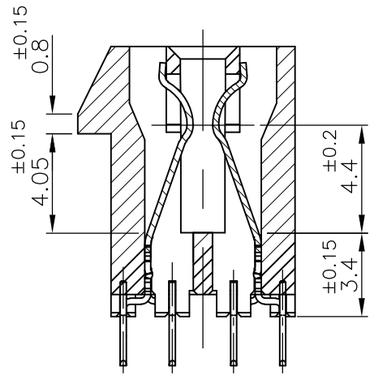

F–F

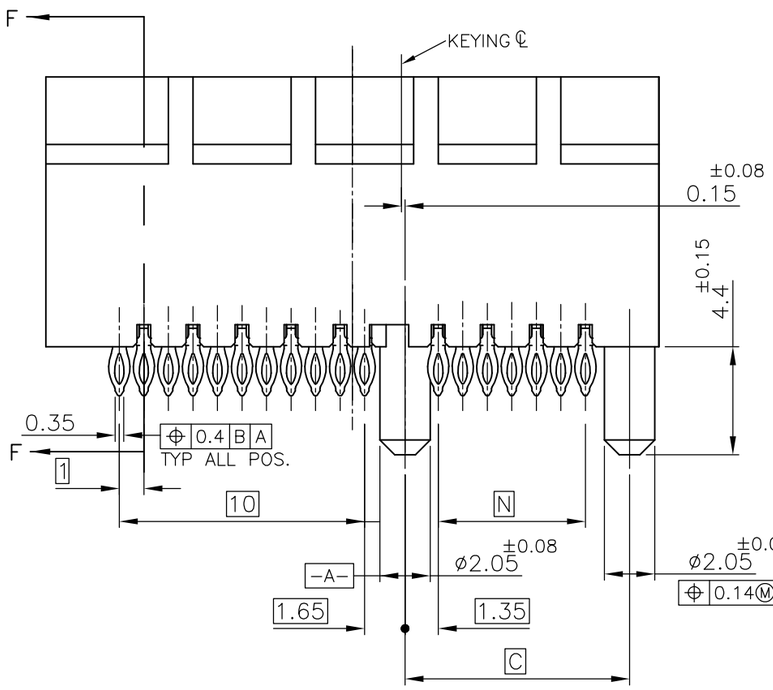

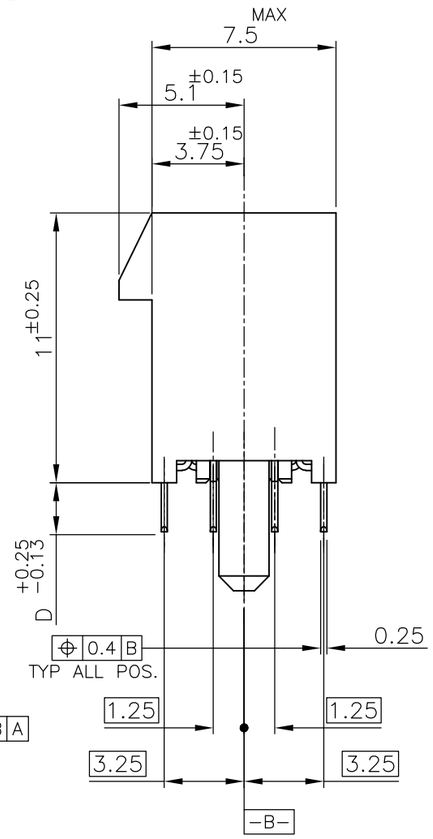

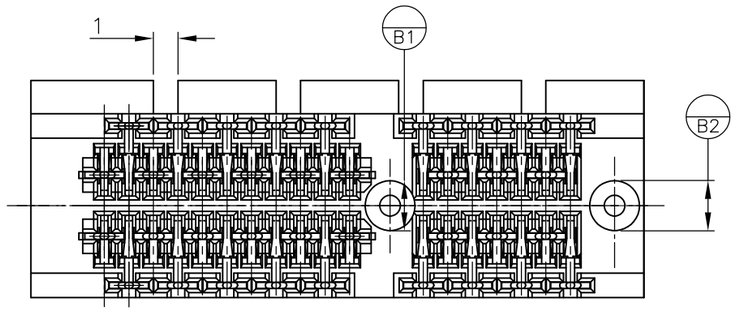

△1 MATERIAL;
HOUSING: HIGH TEMPERATURE THERMO PLASTIC
UL94V–0, COLOR; BLACK
CONTACT:COPPER ALLOY

△2 FINISH;
CONTACT AREA: GOLD PL.0.76μm MIN OVER NICKEL PL.
COMPLIANT PIN ACTION AREA: 0.5μm MIN MATTE TIN
OVER NICKEL PL.

△3 NOT SPECIFY BY PCI EXPRESS STANDARD

△5 FINISH;
CONTACT AREA: GOLD PL.0.76μm MIN OVER NICKEL PL.
COMPLIANT PIN ACTION AREA: 0.5μm MIN BRIGHT TIN–LEAD
OVER NICKEL PL.

△12 FINISH;
CONTACT AREA: GOLD PL.0.38μm MIN OVER NICKEL PL.
COMPLIANT PIN ACTION AREA: 0.5μm MIN MATTE TIN
OVER NICKEL PL.

13 CONNECTOR HAS MET THE REQUIREMENTS PER
PCI EXPRESS GEN 2 TECHNICAL DOCUMENT.

14 THE 2.0mm PF VERSIONS ARE GEN2 AND GEN3 COMPLIANT.

	△12	PRODUCING	37	2.0	40.15	56	38.65	98	8	6–	–3
	△12	PRODUCING	70		73.15	89	71.65	164	16	5–	–4
OBSOLETE		~~PRODUCING~~	~~70~~		~~73.15~~	~~89~~	~~71.65~~	~~164~~	~~16~~	~~3–~~	~~–4~~
OBSOLETE	△5	~~PRODUCING~~	~~37~~		~~40.15~~	~~56~~	~~38.65~~	~~98~~	~~8~~	~~3–~~	~~–3~~
△3		PRODUCING	128		131.15	147	129.65	280		1–	–5
		PRODUCING	70		73.15	89	71.65	164	16	1–	–4
		PRODUCING	37	3.25	40.15	56	38.65	98	8	1–1871058	–3
		PRODUCING	20		23.15	39	21.65	64	4	1–	–2
		PRODUCING	6	3.25	9.15	25	7.65	36	1	1–	–1
		PRELIMINARY	76		79.15	95	77.65	176	16		–7
△3		PRODUCING	128		131.15	147	129.65	280			–5
		PRODUCING	70		73.15	89	71.65	164	16		–4
		PRODUCING	37	2.0	40.15	56	38.65	98	8	1871058–3	
		PRODUCING	20		23.15	39	21.65	64	4		–2
	△2	PRELIMINARY	6	2.0	9.15	25	7.65	36	1	1871058–1	
FINISH		TOOLING STATUS	N	D	C	B	A	POS.	PORT	P/N	

THIS DRAWING IS A CONTROLLED DOCUMENT.

DIMENSIONS: 単位： 粍 mm

TOLERANCES UNLESS OTHERWISE SPECIFIED: 一般公差 ±0.3 ±2°
~~0 PLC ± –~~
~~1 PLC ± –~~
~~2 PLC ± –~~
~~3 PLC ± –~~
~~4 PLC ± –~~
~~ANGLES ± –~~

MATERIAL 材料 △1

FINISH 仕上 SEE NOTE 2

DWN	T.KATANO	02DEC05
CHK	R.MURAYAMA	02DEC05
APVD	K.KODAIRA	02DEC05
PRODUCT SPEC 製品規格	108–78340	
APPLICATION SPEC 取付適用規格		
WEIGHT		

TE Connectivity

NAME 名称: PCI EXPRESS CARD EDGE CONN. WITH COMPLIANT PIN V–TYPE

SIZE	CAGE CODE	DRAWING NO 番号	RESTRICTED TO
A3	00779	C–1871058	—

CUSTOMER DRAWING | SCALE 尺度 4:1 | SHEET 1 OF 2 | REV H

THIS DRAWING IS UNPUBLISHED. RELEASED FOR PUBLICATION JUN ,2005.
© COPYRIGHT 2005 By – ALL RIGHTS RESERVED.

LOC	DIST
J	–

REVISIONS 変更

P	LTR	DESCRIPTION	DATE	DWN	APVD
	–	SEE SHEET 1	–	–	–

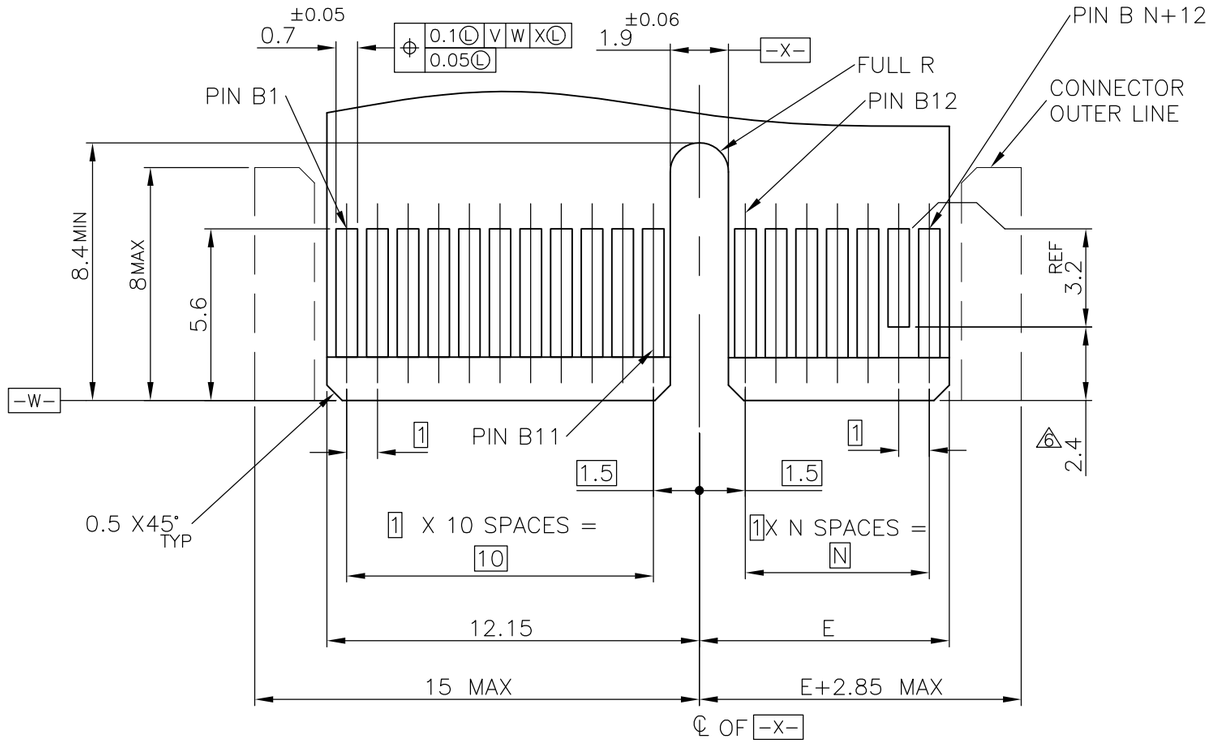

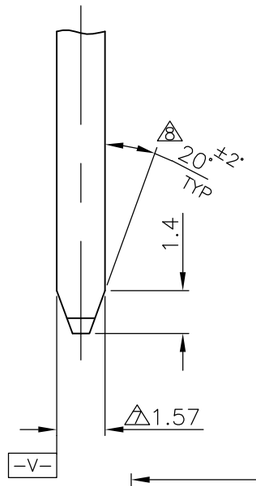

6 THIS DIMENSION IS ONLY APPLIED TO PRSNT PINS.
7 CARD THICKNESS APPLIES ACROSS TABS AND INCLUDES PLATING AND/OR METALIZATION.
8 CHAMFER EDGES MUST BE FREE OF CUTTING BURRS.
9 NO TIE BAR PERMITTED FROM CARD EDGE TO LEADING EDGE OF PAD FOR PRSNT PIN.
10 APPLICATION NOTE;
GOLD CONTACT PAD : ELECTROLESS GOLD PLATING 0.05μm MIN. OVER ELECTROLESS Ni PLATING 2μm MIN.
11 DRILLED HOLE DIA.: 0.77 TO 0.83
COPPER PLATING: 0.025 TO 0.075mm.
FINISHED HOLE DIA. AFTER PLATING: 0.62 TO 0.78 DIA.

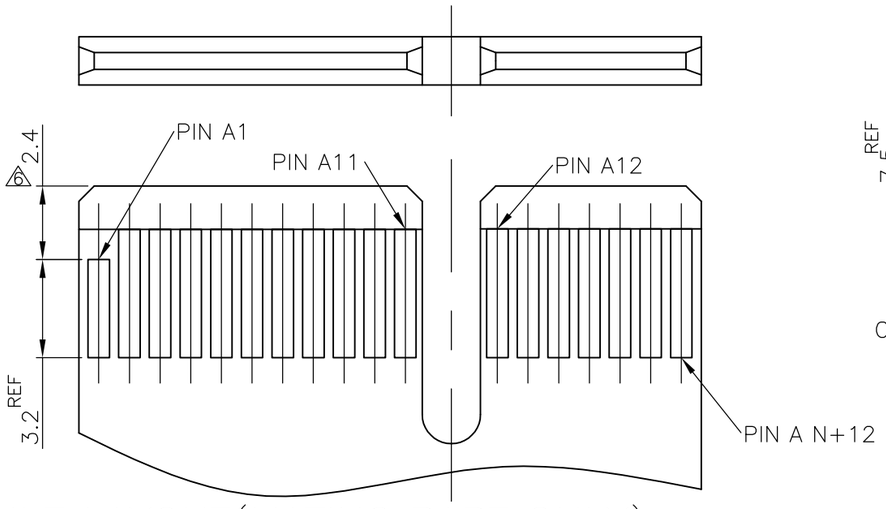

MODULE LAYOUT(MATING PART ONLY)

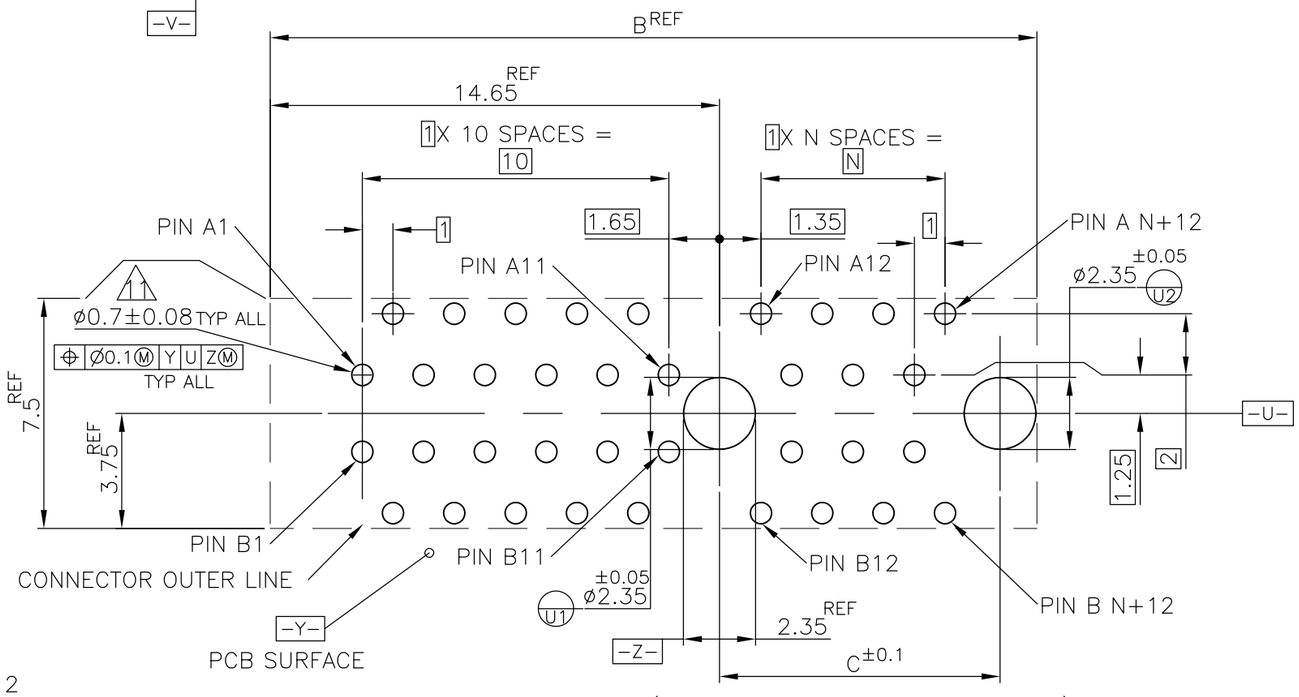

PCB PATTERN LAYOUT (THICKNESS : 1.6mm MIN)

NOT SPECIFY BY PCI EXPRESS STANDARD →

A1,B17,B31,B48,B81,B139	130.15	131.15	147	128	280	
A1,B17,B31,B48,B81,B87	78.15	79.15	95	76	176	16
A1,B17,B31,B48,B81	72.15	73.15	89	70	164	16
A1,B17,B31,B48	39.15	40.15	56	37	98	8
A1,B17,B31	22.15	23.15	39	20	64	4
A1,B17	8.15	9.15	25	6	36	1
PRSNT PIN	E	C	B	N	POS.	PORT

THIS DRAWING IS A CONTROLLED DOCUMENT.

DIMENSIONS: 単位： 粍 mm

TOLERANCES UNLESS OTHERWISE SPECIFIED: 一般公差
~~0 PLC ±–~~ ±0.13
~~1 PLC ±–~~ ±1°
~~2 PLC ±–~~
~~3 PLC ±–~~
~~4 PLC ±–~~
~~ANGLES ±–~~

MATERIAL 材料

FINISH 仕上

DWN
CHK
APVD
PRODUCT SPEC 製品規格
APPLICATION SPEC 取付適用規格
WEIGHT

TE Connectivity

NAME 名称: PCI EXPRESS CARD EDGE CONN. WITH COMPLIANT PIN V–TYPE

SIZE	CAGE CODE	DRAWING NO 番号	RESTRICTED TO
A3	00779	C–1871058	–

CUSTOMER DRAWING | SCALE 尺度 8:1 | SHEET 2 OF 2 | REV H

1470–19 (3/11)