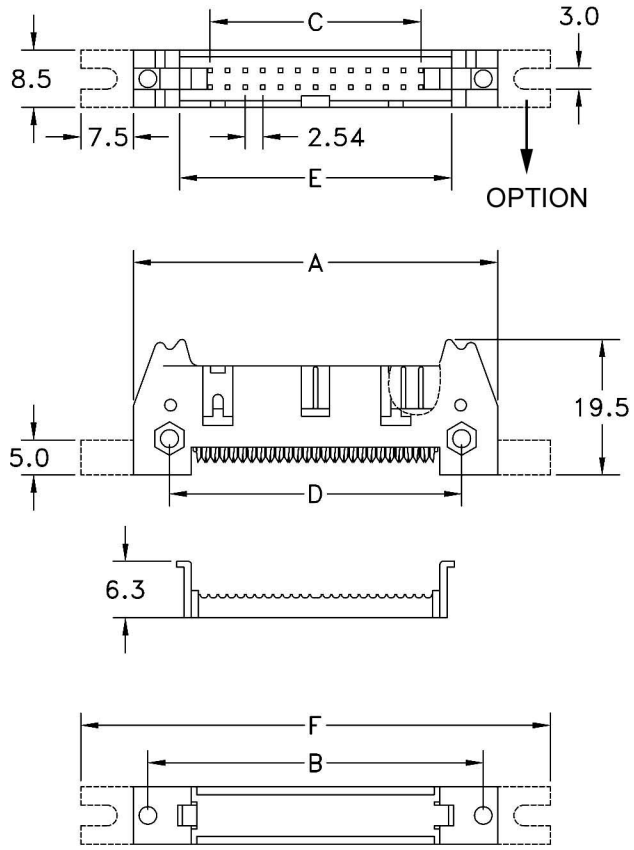

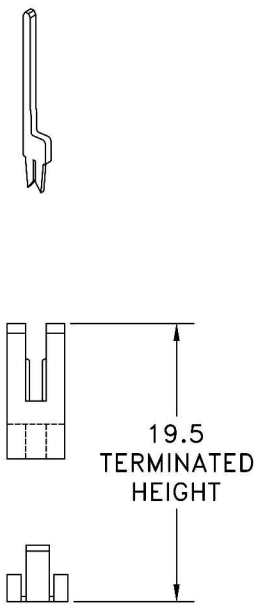

POSITION	A	B	C	D	E	F
10	32.12	27.94	10.16	21.60	18.12	47.42
14	37.20	33.02	15.24	26.68	23.20	52.50
16	39.74	35.56	17.75	29.22	25.74	55.04
20	44.82	40.64	22.86	34.30	30.82	60.12
24	49.90	45.72	27.94	39.38	35.90	65.20
26	52.44	48.26	30.48	41.92	43.52	67.74
30	57.52	53.34	35.56	47.00	43.52	72.82
34	62.60	58.42	40.64	52.08	48.60	77.90
40	70.22	66.04	48.26	59.70	56.22	85.52
50	82.92	78.74	60.96	72.40	68.92	98.22
60	95.62	91.44	73.66	85.10	81.62	110.92
64	100.70	96.52	78.74	90.18	86.70	116.00

SPECIFICATIONS

Material

Insulator: PBT, glass reinforced, rated UL 94V-0

Contact: Brass

Electrical

Current Rating: 1 Amp

Contact Resistance: 30 mΩ max.

Insulation Resistance: 3000 MΩ min.

Dielectric Withstanding Voltage: 500V AC for 1 minute

Operating Temperature: -40℃ to +105℃

- Terminated with 1.27mm pitch flat ribbon cable.

RoHS Compliant

HSM 玄茂科技股份有限公司

HSUAN MAO TECHNOLOGY CO., LTD.

APPD. 核准 Lynne	SCALE 比例 參考	TOLERANCE 容許公差 .X ±0.3 .XX ±0.2 .XXX ±0.1	PART NAME 品名 SHROUDED HEADER IDC TYPE 2.54mm X 2.54mm XXP W/O S/R ROHS LOW-LEAD
DWG. 製圖 Jolin	UNIT 單位 MM	SIZE. 紙張尺寸 A4	
DATE 制表日 2006/12/07	PAGE 張數 1 OF 1	REV. 版次 A	PART NO. 料號 C9800-XXXNXX00R