FO-55111-B

HONEYWELL PART NUMBER
GKNC6L

REV	DOCUMENT	CHANGED BY	CHECK
A	0003478	VA 02APR04	AK

Mechanical features

Enclosure: Thermoplastic, glass fibre reinforced (UL94-V0)
Cover: Thermoplastic, glass fibre reinforced (UL94-V0)
Actuator: separate actuator (Steel-stainless steel)
Temperature: -30°C up to +80°C
Contact type: 2 NC-contact (Zb)
Mechanical life: $1x10^6$ switch operations
Switch frequency: 30/min
Mounting: enclosure 2xM5, actuator 2xM5
Connection type: 4 screw connections M3.5
Conductor cross-section: single core 0.5-1.5mm²

Cable entry size: 3 x M20x1.5
Weight: approx. 0.13 kg
Mounting position: selectable
Protection class (IP-Code): IP65 according to EN 60529, DIN VDE 0470 T1
The rated protection class (IP-Code) is valid only with closed cover and when using an at least equivalent cable gland.

Electrical features

Rated insulation voltage: U_i = 250V AC A300/ 150V DC R150
Conventional thermal current: I_{the} = 10A AC/ 1A DC
Utilization categorie: AC-15 / DC-13
Short circuit protection: Fuse 6A gL/gG, IEC/EN 60947-5-1, appendix K
CSA: 10A 300V AC, A300 (same pol.)

Approvals

Standards

VDE 0660 T100, EN 60947-1
VDE 0660 T200, EN 60947-5-1
IEC 947-5-1
GS-ET 15

Positive opening operation according to DIN EN 60947-5-1 IEC 60947-5-1

Approach possibilities

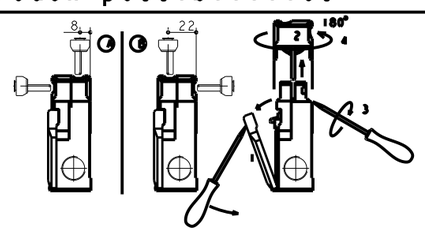

Specials / Remarks

- Turning the cap (pos A/B) allow 4 different directions of drive
- Cover (1) has to be opened before turning the cap (2).
- Insert the screwdriver into the gap between housing and cap and turn until the cap snaps off.
- Remove the cap, turn it 180° (4), latch it into the housing and close the cover.
- Radial actuation may reduce the mechanical life.
- The min. radius refers to a pivot at the top of the cap.
- Unused actuator entry slot must be covered by the plug.
- Do not use the switch as end stop.

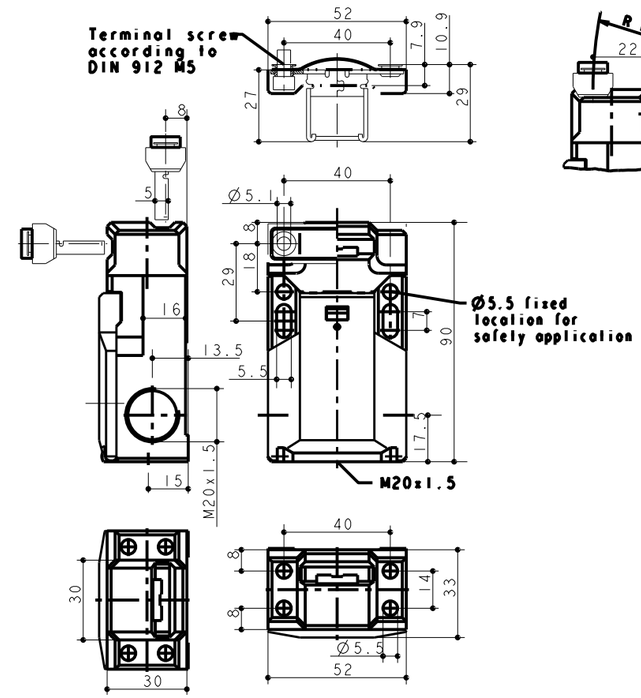

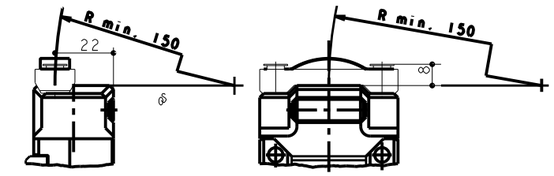

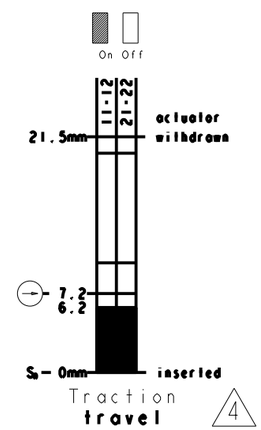

NOTES
1 - ALL DIMENSIONS REFERENCE ONLY
2 KEY INSERTION FORCE: 2 N REF.
3 - KEY EXTRACTION FORCE: 10 N ±1 N
4 TOLERANCE OF OPERATION: ±0,25 mm
5 - KEY SHOWN FOR REFERENCE ONLY, MUST BE PURCHASED SEPARATELY

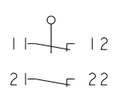

switch diagram

DESIGN UNITS: INCH
TOLERANCES UNLESS NOTED:

NO PLACE	X	±	0
ONE PLACE	.X	±	0.1
TWO PLACE	.XX	±	0.01
THREE PLACE	.XXX	±	0.001
FOUR PLACE	.XXXX	±	0.0001
ANGLES	X	±	0

THIRD ANGLE PROJECTION

DRAWN	VA	02APR04
CHECK	AK	02APR04

THIS DRAWING COVERS A PROPRIETARY ITEM AND IS THE PROPERTY OF HONEYWELL. THIS DRAWING IS NOT TO BE COPIED OR USED WITHOUT THE PERMISSION OF HONEYWELL.

INTERPRET PER ASME Y14.5M-1994 OTHER HONEYWELL ENGINEERING STANDARDS MAY APPLY

Pro/ENGINEER

Honeywell

TITLE SWITCH - DOOR INTERLOCK

SIZE	TYPE	DRAWING NAME	REV
B	1	GKNC6L	A

SCALE NONE SHEET 1 OF 1