SERIES 39
SPST and SPDT, 1/4 Amp

FEATURES
- Fully Protected During Flux Cleaning Operations

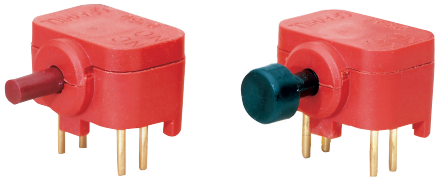

DIMENSIONS in inches (and millimeters)

SPDT–PC Mount
Large Button Style
39-261*

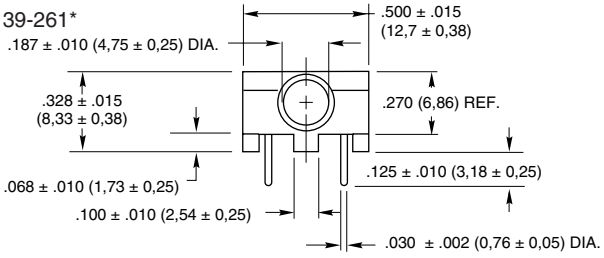

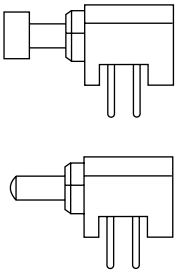

Rating at 28 Vdc Resistive	Rating at 115 Vac Resistive	Rating at 220 Vac Resistive	Operations at Rated Load	Partial Part Number
150 mA	1/4 Amp	1/8 Amp	500,000	39-251* 39-261*

Action	Total Travel	Actuating Force (oz.)
Momentary	.090 + .010/ – .015 (2,29 + 0,25/ – 0,38)	10 ± 3 oz.

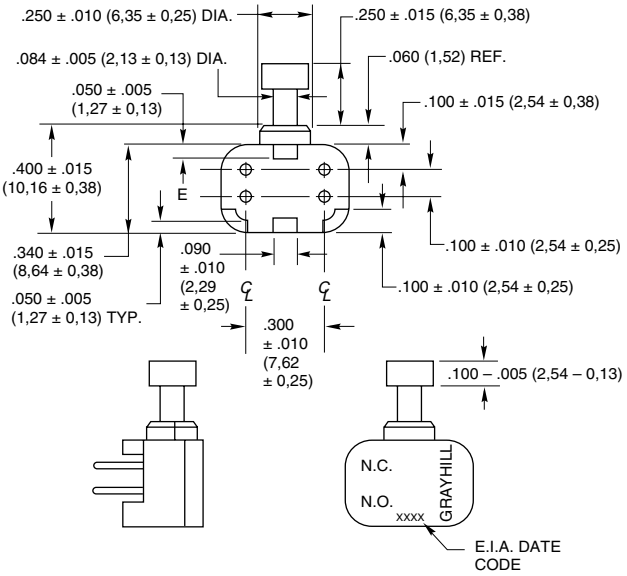

Small Button Style
39-251*

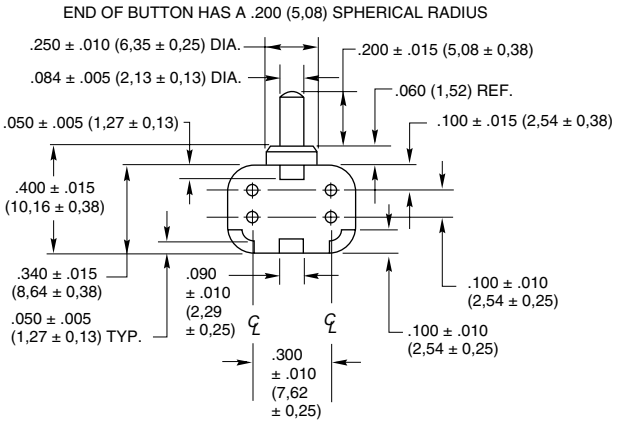

CIRCUITRY

2 Circuits Per Switch

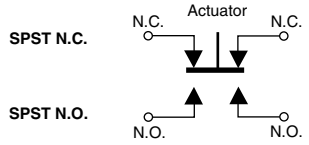

Alternate Wiring

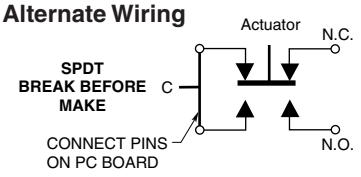

SPECIFICATIONS

Rating Criteria
Contact Resistance: 25 milliohms maximum on a new switch
Voltage Breakdown: 1,000 Vac between mutually insulated parts
Insulation Resistance: 1,000 megohms minimum
Operating Temperature: -40°C to +125°C

Materials and Finishes
Button: Nylon
Base and Cover: Polyester, red in color
Shorting Bar: Phosphor bronze, gold-plated over nickel
Terminals: Brass, gold-plated over nickel
Spring: Tinned music wire
O-Ring: Fluorosilicone

ORDERING INFORMATION

*Complete Part Number	Description
39-251 RED	Small Red Button, SPDT
39-251 BLK	Small Black Button, SPDT
39-261 RED	Large Red Button, SPDT
39-261 BLK	Large Black Button, SPDT