Mechanical Valves
Series VM

Model	VM1000	VM100	VM200
Dimensions (mm)	Side ported 11 x 36 x 16 Bottom ported 11 x 28 x 25	Side ported 17 x 44 x 25 Bottom ported 17 x 44 x 30	25 x 40 x 52

	VM1000	VM100	VM200
Basic			
Roller lever	●	●	●
One way roller lever	●	●	●
Straight plunger		●	●
Roller plunger		●	●
Cross roller plunger		●	●
Toggle lever	●	●	●
Push button (Mushroom)		●	●
Push button (Extended)	●	●	●
Push button (Flush)		●	●
Twist selector (2 position)		●	●
Key selector (2 position)		●	●
Twist selector (3 position)		●	●
Foot pedal			●
Push-pull			

	VM1000	VM100	VM200
	P. 5-6-8	P. 5-6-12	P. 5-6-20
Effective area (mm²)	1	2.5	19
Number of ports	2, 3	2, 3	2, 3
Function	Poppet	Poppet	Poppet

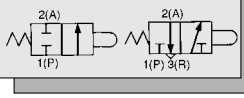

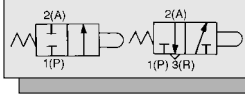

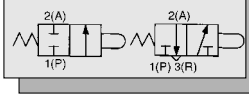

Mechanical Valves

VM400	VZM500	VZM400	VFM300	VFM200	VM800
21 x 35 x 53	18 x 28 x 87	18 x 30 x 91	26 x 35 x 94	23 x 40 x 115	30 x 40 x 57
●	●	●	●	●	
●	●	●	●	●	
●	●	●	●	●	
●	●	●	●	●	
●					
●	●	●	●	●	
●	●	●	●	●	
●	●	●	●	●	
●	●	●	●	●	
●	●	●	●	●	
●	●	●	●	●	
	●				
P. 5-6-26	P. 5-6-41	P. 5-6-35	P. 5-6-48	P. 5-6-54	P. 5-6-32
7	10.8	9.9	18	18	6
3	5	5	5	5	3
Balanced poppet	Rubber spool	Metal spool	Rubber spool	Metal spool	Balanced poppet
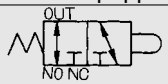	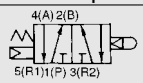	* 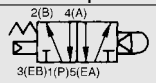	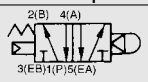	* 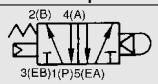	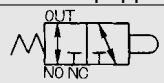

Roller lever

Adjustable roller lever

Adjustable rod lever

* Dual pressure is available only on external pilot.

⚠ Precautions

Be sure to read before handling. Refer to pages 5-12-2 to 6 for Safety Instructions and Solenoid Valve Precautions.

Mounting

⚠ Warning

1. Conditions for mechanical operation

Do not move the mechanical operation beyond the operating limit position, as this could damage the mechanical valve itself and lead to equipment malfunction.

• Actuator stroke

Operate the mechanism within the stroke range that has been obtained through the formula given below. (Do not move beyond the operating limit position.)

Operating stroke: (P.T. + 0.5 x O.T.) to (P.T. + O.T. – 0.1)

Series	Actuator		Actuator stroke (mm)
VM1000	Basic	T.T. = 4.8 mm (T.T. = 2.5 mm)	3.7 to 4.7 (2.2 to 2.4)
	Roller lever		3.5 to 4.4
	One way roller lever		3.5 to 4.4
VM100	Basic		2.2 to 2.9
	Roller lever		4.3 to 5.3
	One way roller lever		4.3 to 5.3
	Straight plunger		2.7 to 3.4
	Roller plunger		2.7 to 3.4
	Cross roller plunger		2.7 to 3.4
VM200	Basic		4.0 to 4.9
	Roller lever		8.7 to 10.7
	One way roller lever		9.5 to 11.7
	Straight plunger		4.5 to 5.4
	Roller plunger		4.5 to 5.4
	Cross roller plunger		4.5 to 5.4
VM400	Basic		2.5 to 3.4
	Roller lever		6.2 to 8.2
	One way roller lever		6.5 to 8.7
	Straight plunger		4.5 to 5.4
	Roller plunger		4.5 to 5.4
	Cross roller plunger		4.5 to 5.4
VZM500 **VZM400** **VFM300** **VFM200**	Basic		2.0 to 2.9
	Roller lever		4.2 to 6.0
	One way roller lever		4.7 to 6.7
	Straight plunger		2.5 to 3.4
	Roller plunger		2.5 to 3.4

For straight and roller plunger types, there is a groove indicating P.T. and T.T. for stroke adjustment.

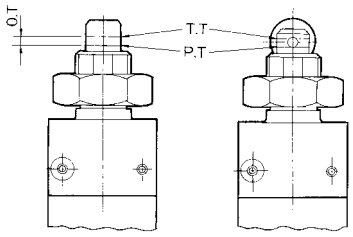

Pressure Source

⚠ Warning

Operable fluid is either air or inert gas only. It cannot be used for corrosive gas and fluid.

⚠ Caution

When using vacuum pressure for VM100, supply vacuum pressure to P port.

Definition of Symbol

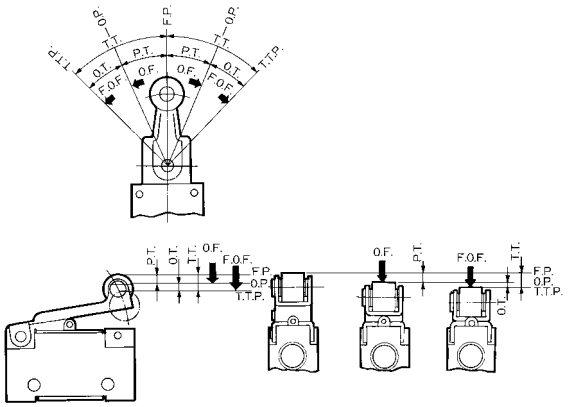

F.P. (Free Position) ····· No external force applied.

O.P. (Operating Position) ····· Internal valve opening position.

T.T.P. (Total Travel Position)···· Includes over travel.

O.F. (Operating Force)····· Operating force required to initial valve opening position.

F.O.F. (Full Operating Force) ·· Required force to total travel position.

P.T. (Pre-travel) ····· From free position to initial valve operating position.

O.T. (Over Travel)····· From initial valve operating position to total travel position.

T.T. (Total Travel)····· From free position to total travel position.

Caution

This product cannot be used for applications in which the pressure must be sealed because there will be a slight leakage. Please consult with SMC for this type of application.

⚠ Precautions

Be sure to read before handling. Refer to pages 5-12-2 to 6 for Safety Instructions and Solenoid Valve Precautions.

Mounting

⚠ Warning

2. Conditions for mechanical operation

- **Cam and dog angle and maximum speed**
  Select the angle and the maximum speed of the operating cam and the dog of the mechanism from within the selection range given in the table below.
  If they are operated beyond the selection range, the cam and the dog could apply impact shocks to the actuator, leading to damage.

Series	Actuator	Angle limit switch actuator	Max. speed limit switch actuator (m/s)
VM1000	Roller lever	30°	0.7
		45°	0.3
	One way roller lever	30°	0.7
		45°	0.3
VM100 VM200 VM400	Roller lever	30°	0.7
		45°	0.3
	One way roller lever	30°	0.7
		45°	0.3
	Straight plunger	—	0.2
	Roller plunger	30°	0.3
	Cross roller plunger	30°	0.3
VZM500 VZM400 VFM300 VFM200	Roller lever	30°	1.5
		45°	0.7
	One way roller lever	30°	0.7
		45°	0.3
	Straight plunger	—	0.4
	Roller plunger	30°	0.7
VM800	Roller lever	30°	0.5
		45°	0.2
	Adjustable roller lever	30°	0.2
		45°	0.1
	Adjustable rod lever	—	0.2

Avoid abrupt angles on limit switch actuator.

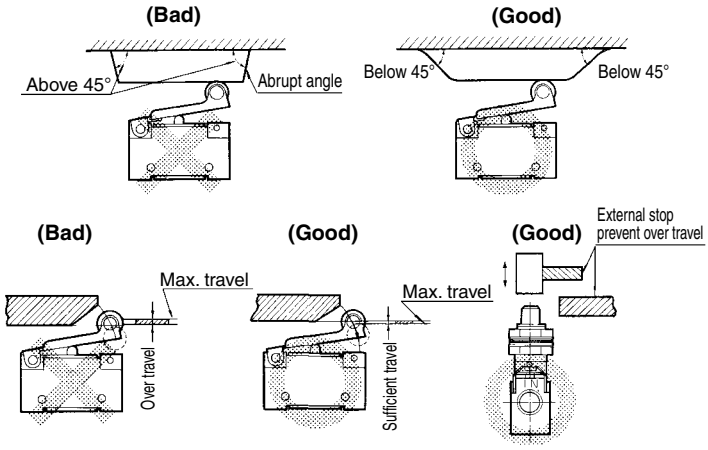

Cam and Dog Material

Roller material	Plunger material	Plunger surface finish
Polyacetal	Steel	▽▽▽
Steel	Steel, Resin	▽▽

3. Never perform additional machining such as enlarging the body mounting holes.
As doing so could lead to abnormal conditions such as air leakage.

4. Operate all manual valves such as the push pin types, the selector types, and the flip toggle types with your finger.
If a hammer or other tools are used, or it is operated mechanically through the use of a cylinder or the like, damage could result.

Environments

⚠ Caution

1. Do not operate it in an area in which fluids such as oil, coolant, or water splash on it or dust comes in contact with it.
Because it does not have a waterproof or dustproof construction, fluids or dust could enter the valve, leading to malfunction. Therefore, take measures such as providing a protective cover to prevent direct exposure.

Maintenance

⚠ Warning

1. Perform inspections on a regular basis as necessary, such as at the beginning of an operation, to make sure that the mechanical valve operates properly.
Failure to observe this precaution could lead to unsafe operation, such as unintended operation or malfunction.

How to Change the Buttons

Replace the button in the following manner to change color of the button.

1. Push button (Flush type)

- Installation ···· Of the four colors, red, green, black, and yellow, select and align the protruding portion of the button with the recessed portion of the body and push in.
- Removal ···· Remove the fastening ring and insert the tip of a small flat screwdriver into the groove of the button to pry it up.

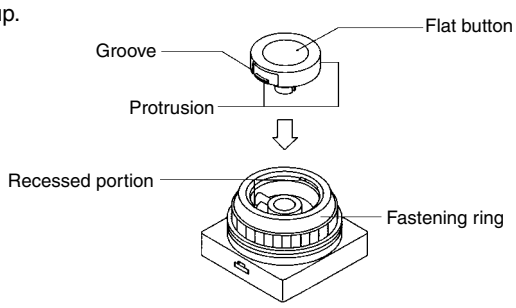

2. Push button (Mushroom and extended types)
At the time of shipment, only 1 button of the color that you specified is attached to the body.

	Mushroom type	Extended type
Mounting	Align the protruding portion of the button with the recessed portion of the body and push in. (Use the mark on the button as a reference to align the protruding part.)	Align the protruding portion of the button with the recessed portion of the body and push in.
Removal	Placing your finger under the collar of the button on the side of the mark, tilt it upward.	Remove the fastening ring and insert the tip of a small flat screwdriver into the groove of the button to pry it up.

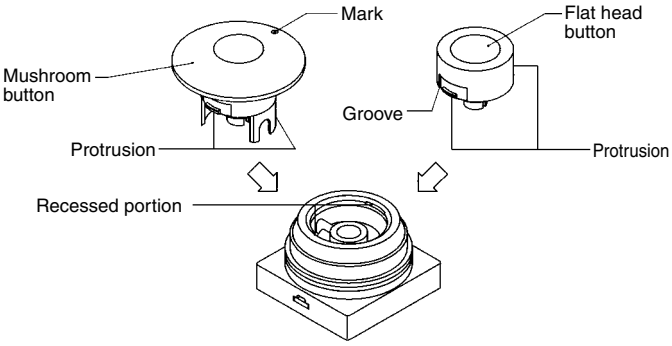

How to remove a mushroom button

How to remove at panel mount

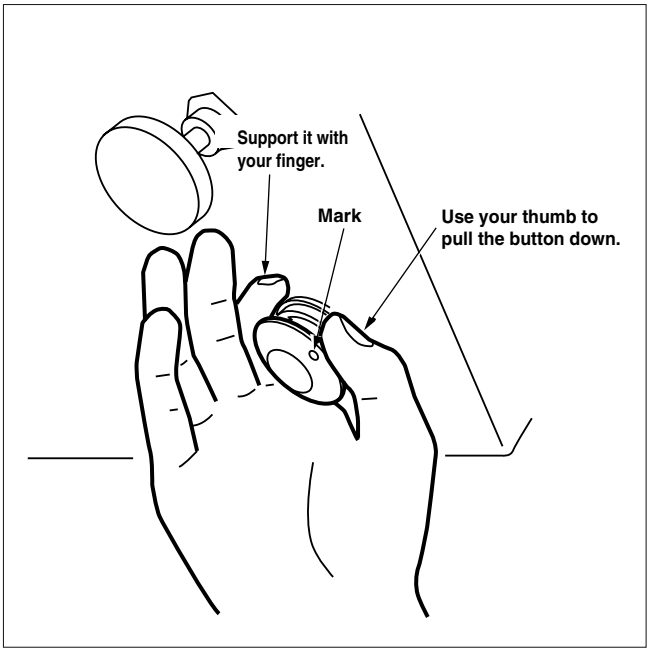

Removing the valve as a unit

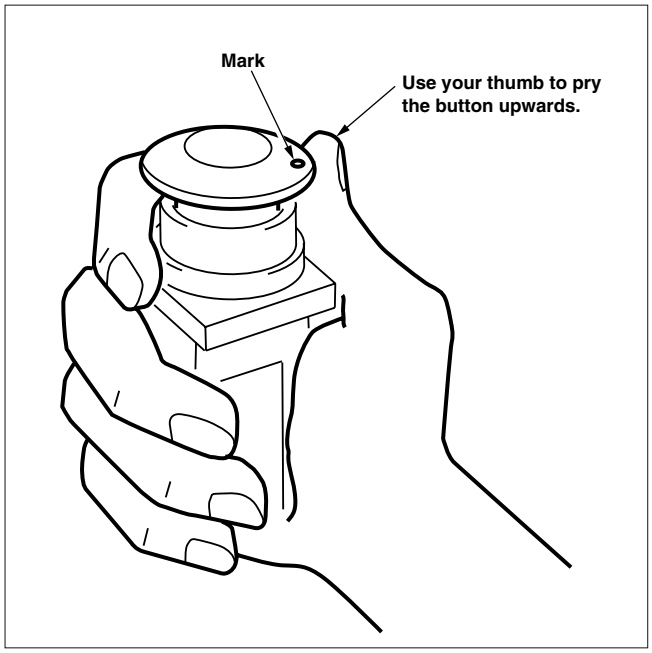

Replacement parts

1. Use the part numbers listed below to order individual mushroom head or flat head buttons.

Color	Mushroom button	Extended button
Red	3402186R	3402187R
Black	3402186B	3402187B
Green	3402186G	3402187G
Yellow	3402186Y	3402187Y

Color	Push button (Flush)
Red	3402188R
Black	3402188B
Green	3402188G
Yellow	3402188Y

2. To order single fastening ring, use the part number below.
Fastening ring: 3402184

3. To order a single push button for series VM1000 and a single cover use the part number below.

Color	Push button	Cover for push button
Red	3410701-R	3410703 (White only)
Black	3410701-B	
Green	3410701-G	

Micro Mechanical Valve
Series VM1000

Miniature stucture requires little mounting space.

Built-in hose nipple connection.

Piping options:
Side piping, Bottom piping

Over Travel after actuation (mechanical operated types)

Specifications

Valve type	N.C. poppet
Number of ports	2 or 3
Piping	Side or bottom ported
Fluid	Air/Inert gas
Operating pressure	0 to 0.8 MPa
Ambient and fluid temperature	–5 to 60°C (No freezing)
Effective area	1 mm^2
Lubrication	Not required (Use turbine oil Class 1 ISO VG32, if lubricated.)
Fitting	With hose nipple
Weight (Basic)	6 g

Option

Total travel (T.T.)	2.5 mm (Basic)

- A commercially available actuator for the V microswitch can be installed.
- However, be aware that there are different microswitches, such as the P.T./O.T. or F.O.F. types.
- T.T. 2.5 mm is available for basic style only.

Model

	Actuator	Piping	Number of ports	Applicable tubing		Note
				T0425	TU0425/ET0403	
Mechanical operation	Basic	Side ported	3 port	**VM1000-4N-00**	**VM1000-4NU-00**	
			2 port	**VM1100-4N-00**	**VM1100-4NU-00**	
		Bottom ported	3 port	**VM1010-4N-00**	**VM1010-4NU-00**	
			2 port	**VM1110-4N-00**	**VM1110-4NU-00**	
	Roller lever	Side ported	3 port	**VM1000-4N-01**	**VM1000-4NU-01**	
			2 port	**VM1100-4N-01**	**VM1100-4NU-01**	
		Bottom ported	3 port	**VM1010-4N-01**	**VM1010-4NU-01**	
			2 port	**VM1110-4N-01**	**VM1110-4NU-01**	
	One way roller lever	Side ported	3 port	**VM1000-4N-02**	**VM1000-4NU-02**	
			2 port	**VM1100-4N-02**	**VM1100-4NU-02**	
		Bottom ported	3 port	**VM1010-4N-02**	**VM1010-4NU-02**	
			2 port	**VM1110-4N-02**	**VM1110-4NU-02**	
Manual operation	Toggle lever	Side ported	3 port	**VM1000-4N-08**	**VM1000-4NU-08**	
			2 port	**VM1100-4N-08**	**VM1100-4NU-08**	
		Bottom ported	3 port	**VM1010-4N-08**	**VM1010-4NU-08**	
			2 port	**VM1110-4N-08**	**VM1110-4NU-08**	
	Push button	Side ported	3 port	**VM1000-4N-32R**	**VM1000-4NU-32R**	Red
			2 port	**VM1100-4N-32R**	**VM1100-4NU-32R**	Red
		Bottom ported	3 port	**VM1010-4N-32R**	**VM1010-4NU-32R**	Red
			2 port	**VM1110-4N-32R**	**VM1110-4NU-32R**	Red
		Side ported	3 port	**VM1000-4N-32B**	**VM1000-4NU-32B**	Black
			2 port	**VM1100-4N-32B**	**VM1100-4NU-32B**	Black
		Bottom ported	3 port	**VM1010-4N-32B**	**VM1010-4NU-32B**	Black
			2 port	**VM1110-4N-32B**	**VM1110-4NU-32B**	Black
		Side ported	3 port	**VM1000-4N-32G**	**VM1000-4NU-32G**	Green
			2 port	**VM1100-4N-32G**	**VM1100-4NU-32G**	Green
		Bottom ported	3 port	**VM1010-4N-32G**	**VM1010-4NU-32G**	Green
			2 port	**VM1110-4N-32G**	**VM1110-4NU-32G**	Green

Note) To replace the push button and push button cover alone, refer to page 5-6-7.
Other parts and actuator cannot be replaced.

How to Order

VM1 0 0 0 – 4N – 00 R

Number of ports

0	3 port
1	2 port

Piping

0	Side ported
1	Bottom ported

Total travel/Basic (T.T.)

0	4.8 mm
1	2.5 mm (Option)*

* Basic only.

Applicable tubing (Material/Size)

4N	Nylon ø4/2.5 (T0425)
4NU	Nylon ø4/3 (T0403)
	Soft Nylon ø4/2.5 (TS0425)
	Polyurethane ø4/2.5 (TU0425)

Actuator type

00	Basic
01	Roller lever
02	One way roller lever
08	Toggle lever
32	Push button

Color of push button

R	Red
G	Green
B	Black

Construction

Side ported/Non-actuated

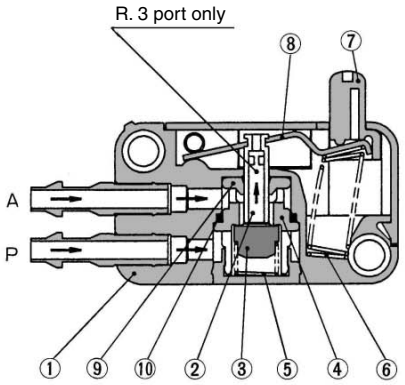

Side ported/Actuated

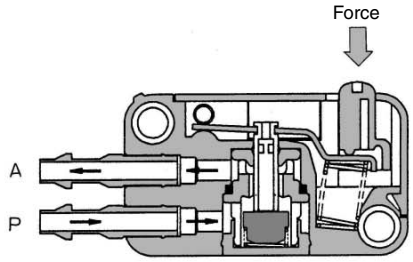

Bottom ported/Non-actuated

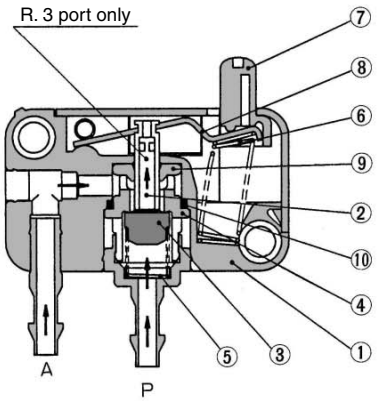

Bottom ported/Actuated

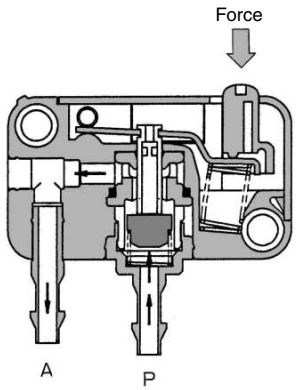

Component Parts

No.	Description	Material	Note
①	Body	PBT	
②	Valve	POM	
③	Valve	NBR	
④	Retainer	POM	
⑤	Spring	Stainless steel	

No.	Description	Material	Note
⑥	Spring	Stainless steel	
⑦	Plunger	POM	T.T. = 2.5 mm only, w/threads
⑧	Lever	Stainless steel	
⑨	Packing	NBR	
⑪	O-ring	NBR	

Series VM1000/Side Ported

Basic

VM1000-4N-00
VM1000-4NU-00
VM1100-4N-00
VM1100-4NU-00

[ ]: T.T. = 2.5 mm

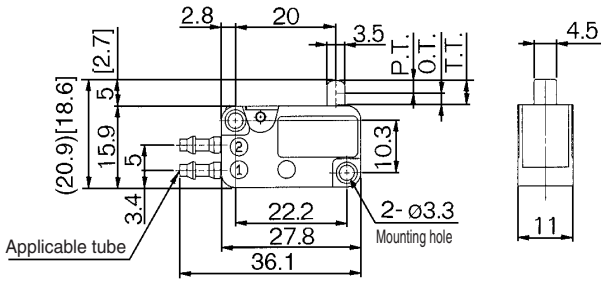

JIS Symbol/2 port

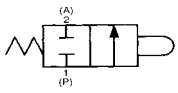

3 port

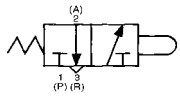

∗ 0.5 MPa supply

		Applicable tubing	
		T0425	TU0425, T0403, TS0425
Side ported	3 port	VM1000-4N-00	VM1000-4NU-00
	2 port	VM1100-4N-00	VM1100-4NU-00
F.O.F. ∗		6 N	
P.T.		2.5 mm [2.0 mm]	
O.T.		2.3 mm [0.5 mm]	
T.T.		4.8 mm [2.5 mm]	

Roller lever

VM1000-4N-01
VM1000-4NU-01
VM1100-4N-01
VM1100-4NU-01

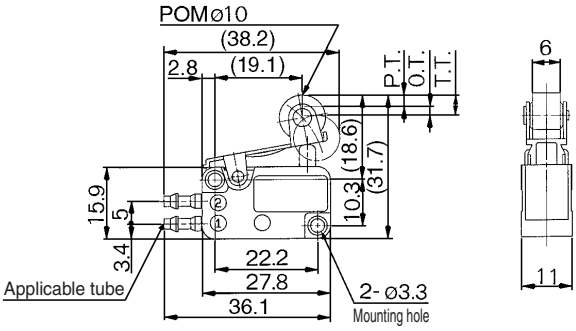

JIS Symbol/2 port

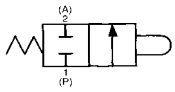

3 port

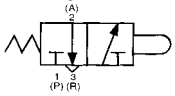

∗ 0.5 MPa supply

		Applicable tubing	
		T0425	TU0425, T0403, TS0425
Side ported	3 port	VM1000-4N-01	VM1000-4NU-01
	2 port	VM1100-4N-01	VM1100-4NU-01
F.O.F. ∗		6 N	
P.T.		2.5 mm	
O.T.		2.0 mm	
T.T.		4.5 mm	

One way roller lever

VM1000-4N-02
VM1000-4NU-02
VM1100-4N-02
VM1100-4NU-02

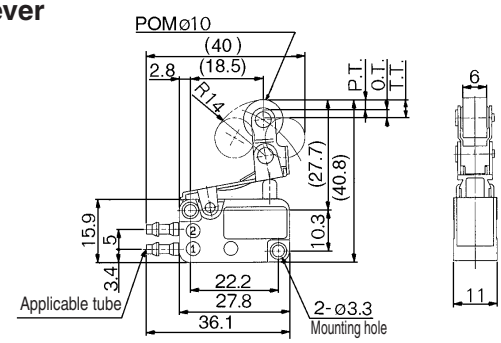

JIS Symbol/2 port

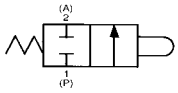

3 port

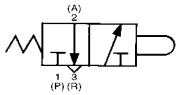

∗ 0.5 MPa supply

		Applicable tubing	
		T0425	TU0425, T0403, TS0425
Side ported	3 port	VM1000-4N-02	VM1000-4NU-02
	2 port	VM1100-4N-02	VM1100-4NU-02
F.O.F. ∗		6 N	
P.T.		2.5 mm	
O.T.		2.0 mm	
T.T.		4.5 mm	

Toggle lever

VM1000-4N-08
VM1000-4NU-08
VM1100-4N-08
VM1100-4NU-08

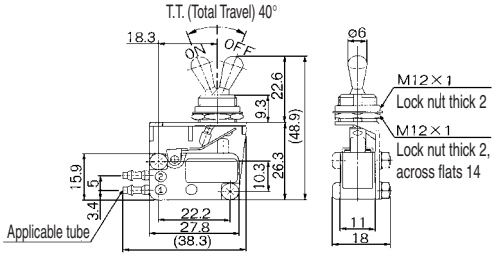

Panel mounting hole

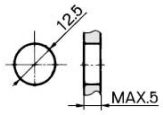

JIS Symbol/2 port

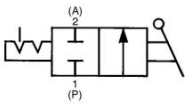

3 port

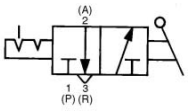

∗ 0.5 MPa supply

		Applicable tubing	
		T0425	TU0425, T0403, TS0425
Side ported	3 port	VM1000-4N-08	VM1000-4NU-08
	2 port	VM1100-4N-08	VM1100-4NU-08
F.O.F. ∗		4 N	
P.T.		40°	

Push button

VM1000-4N-32
VM1000-4NU-32
VM1100-4N-32
VM1100-4NU-32

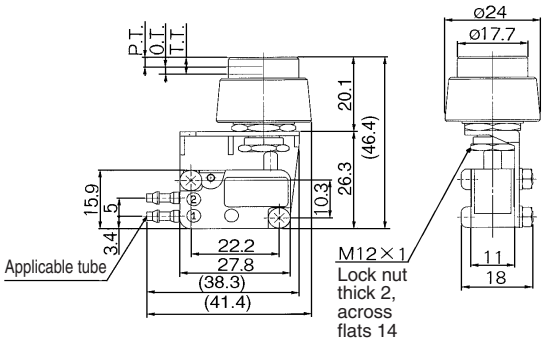

Panel mounting hole

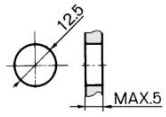

JIS Symbol/2 port

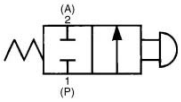

3 port

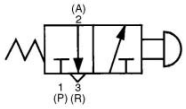

∗ 0.5 MPa supply

		Applicable tubing	
		T0425	TU0425, T0403, TS0425
Side ported	3 port	VM1000-4N-32	VM1000-4NU-32
	2 port	VM1100-4N-32	VM1100-4NU-32
F.O.F. ∗		6 N	
P.T.		2.5 mm	
O.T.		2.0 mm	
T.T.		4.5 mm	

Series VM1000/Bottom Ported

Basic

VM1010-4N-00
VM1010-4NU-00
VM1110-4N-00
VM1110-4NU-00

[ ]: T.T. = 2.5 mm

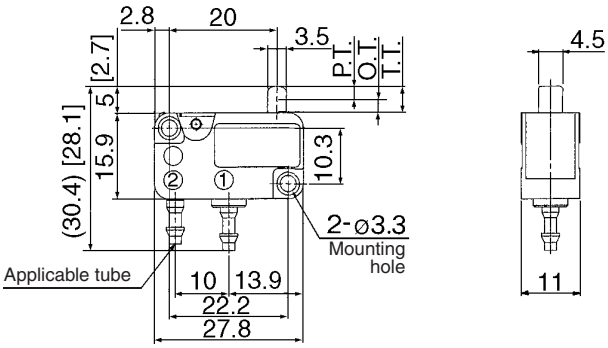

JIS Symbol/2 port

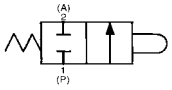

3 port

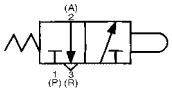

∗ 0.5 MPa supply

		Applicable tubing	
		T0425	TU0425, T0403, TS0425
Bottom ported	3 port	VM1010-4N-00	VM1010-4NU-00
	2 port	VM1110-4N-00	VM1110-4NU-00
F.O.F. ∗		6 N	
P.T.		2.5 mm	
O.T.		2.3 mm [0.5 mm]	
T.T.		4.8 mm [2.5 mm]	

Roller lever

VM1010-4N-01
VM1010-4NU-01
VM1110-4N-01
VM1110-4NU-01

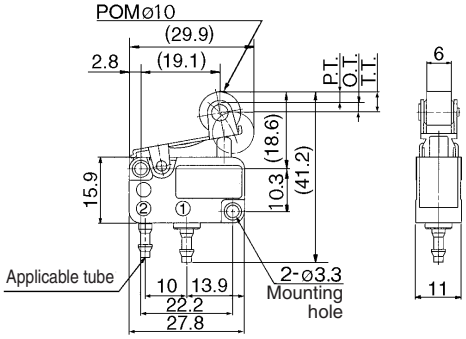

JIS Symbol/2 port

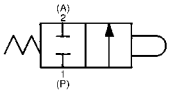

3 port

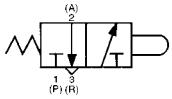

∗ 0.5 MPa supply

		Applicable tubing	
		T0425	TU0425, T0403, TS0425
Bottom ported	3 port	VM1010-4N-01	VM1010-4NU-01
	2 port	VM1110-4N-01	VM1110-4NU-01
F.O.F. ∗		6 N	
P.T.		2.5 mm	
O.T.		2.0 mm	
T.T.		4.5 mm	

One way roller lever

VM1010-4N-02
VM1010-4NU-02
VM1110-4N-02
VM1110-4NU-02

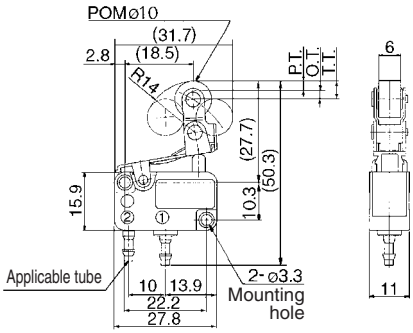

JIS Symbol/2 port

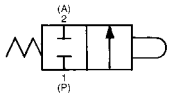

3 port

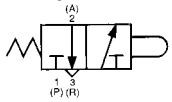

∗ 0.5 MPa supply

		Applicable tubing	
		T0425	TU0425, T0403, TS0425
Bottom ported	3 port	VM1010-4N-02	VM1010-4NU-02
	2 port	VM1110-4N-02	VM1110-4NU-02
F.O.F. ∗		6 N	
P.T.		2.5 mm	
O.T.		2.0 mm	
T.T.		4.5 mm	

Toggle lever

VM1010-4N-08
VM1010-4NU-08
VM1110-4N-08
VM1110-4NU-08

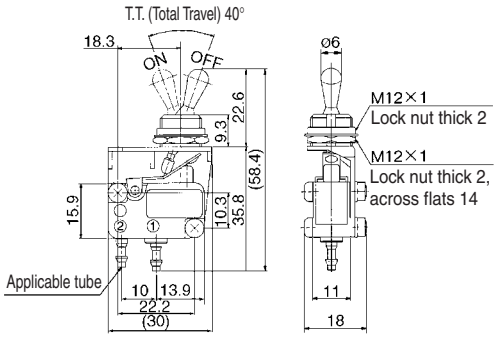

Panel mounting hole

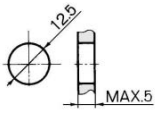

JIS Symbol/2 port

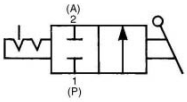

3 port

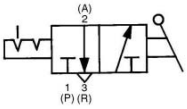

∗ 0.5 MPa supply

		Applicable tubing	
		T0425	TU0425, T0403, TS0425
Bottom ported	3 port	VM1010-4N-08	VM1010-4NU-08
	2 port	VM1110-4N-08	VM1110-4NU-08
F.O.F. ∗		4 N	
T.T.		40°	

Push button

VM1010-4N-32
VM1010-4NU-32
VM1110-4N-32
VM1110-4NU-32

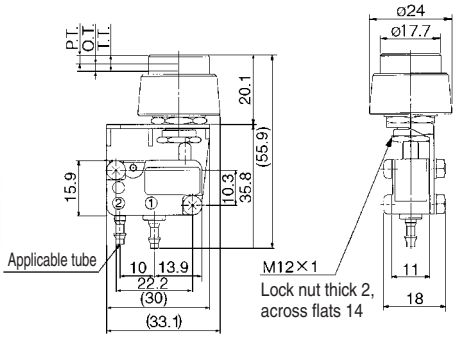

Panel mounting hole

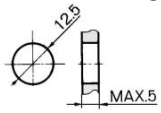

JIS Symbol/2 port

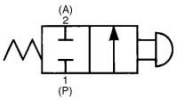

3 port

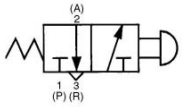

∗ 0.5 MPa supply

		Applicable tubing	
		T0425	TU0425, T0403, TS0425
Bottom ported	3 port	VM1010-4N-32	VM1010-4NU-32
	2 port	VM1110-4N-32	VM1110-4NU-32
F.O.F. ∗		6 N	
P.T.		2.5 mm	
O.T.		2.0 mm	
T.T.		4.5 mm	

2/3 Port Mechanical Valve
Series VM100

Compact size.
Piping options:
Side piping, Bottom piping
A variety of actuator types.

Specifications

Piping	Side ported	Bottom ported
Fluid	Air/Inert gas	
Operating pressure	–100 kPa to 1.0 MPa	
Ambient and fluid temperature	–5 to 60°C (No freezing)	
Effective area	2.5 mm²	
Lubrication	Not required (Use turbine oil Class 1 ISO VG32, if lubricated.)	
Port size	1/8	M5 x 0.8
Weight (Basic)	95 g	110 g

Model

		Side ported		Bottom ported		Actuator part no.	Application
		2 port	3 port	2 port	3 port		
Mechanical operation	Basic	**VM120-01-00**	**VM130-01-00**	**VM122-M5-00**	**VM132-M5-00**	—	
		VM121-01-00	**VM131-01-00**	**VM123-M5-00**	**VM133-M5-00**		
	Roller lever	**VM121-01-01**	**VM131-01-01**	**VM123-M5-01**	**VM133-M5-01**	—	Polyacetal roller
		VM121-01-01S	**VM131-01-01S**	**VM123-M5-01S**	**VM133-M5-01S**	—	Hard steel roller
	One way roller lever	**VM121-01-02**	**VM131-01-02**	**VM123-M5-02**	**VM133-M5-02**	—	Polyacetal roller
		VM121-01-02S	**VM131-01-02S**	**VM123-M5-02S**	**VM133-M5-02S**	—	Hard steel roller
	Straight plunger	**VM120-01-05**	**VM130-01-05**	**VM122-M5-05**	**VM132-M5-05**	VM-05B	—
	Roller plunger	**VM120-01-06**	**VM130-01-06**	**VM122-M5-06**	**VM132-M5-06**	VM-06B	Polyacetal roller
		VM120-01-06S	**VM130-01-06S**	**VM122-M5-06S**	**VM132-M5-06S**	VM-06BS	Hard steel roller
	Cross roller plunger	**VM120-01-07**	**VM130-01-07**	**VM122-M5-07**	**VM132-M5-07**	VM-07B	Polyacetal roller
		VM120-01-07S	**VM130-01-07S**	**VM122-M5-07S**	**VM132-M5-07S**	VM-07BS	Hard steel roller
Manual operation	Toggle lever	**VM120-01-08**	**VM130-01-08**	**VM122-M5-08**	**VM132-M5-08**	VM-08B	
	Push button (Mushroom)	**VM120-01-30R**	**VM130-01-30R**	**VM122-M5-30R**	**VM132-M5-30R**	VM-30AR	Red
		VM120-01-30B	**VM130-01-30B**	**VM122-M5-30B**	**VM132-M5-30B**	VM-30AB	Black
		VM120-01-30G	**VM130-01-30G**	**VM122-M5-30G**	**VM132-M5-30G**	VM-30AG	Green
		VM120-01-30Y	**VM130-01-30Y**	**VM122-M5-30Y**	**VM132-M5-30Y**	VM-30AY	Yellow
	Push button (Extended)	**VM120-01-32R**	**VM130-01-32R**	**VM122-M5-32R**	**VM132-M5-32R**	VM-32AR	Red
		VM120-01-32B	**VM130-01-32B**	**VM122-M5-32B**	**VM132-M5-32B**	VM-32AB	Black
		VM120-01-32G	**VM130-01-32G**	**VM122-M5-32G**	**VM132-M5-32G**	VM-32AG	Green
		VM120-01-32Y	**VM130-01-32Y**	**VM122-M5-32Y**	**VM132-M5-32Y**	VM-32AY	Yellow
	Push button (Flush)	**VM120-01-33**	**VM130-01-33**	**VM122-M5-33**	**VM132-M5-33**	VM-33A	With a set of red, black, green, yellow
	Twist selector (2 position)	**VM120-01-34R**	**VM130-01-34R**	**VM122-M5-34R**	**VM132-M5-34R**	VM-34AR	Red
		VM120-01-34B	**VM130-01-34B**	**VM122-M5-34B**	**VM132-M5-34B**	VM-34AB	Black
		VM120-01-34G	**VM130-01-34G**	**VM122-M5-34G**	**VM132-M5-34G**	VM-34AG	Green
		VM120-01-34Y	**VM130-01-34Y**	**VM122-M5-34Y**	**VM132-M5-34Y**	VM-34AY	Yellow
	Key selector (2 position)	**VM120-01-36**	**VM130-01-36**	**VM122-M5-36**	**VM132-M5-36**	VM-36A	
	Twist selector (3 position)	**VM131-01-35R**	**VM151-01-35R**	**VM133-M5-35R**	**VM153-M5-35R**	—	Red
		VM131-01-35B	**VM151-01-35B**	**VM133-M5-35B**	**VM153-M5-35B**	—	Black
		VM131-01-35G	**VM151-01-35G**	**VM133-M5-35G**	**VM153-M5-35G**	—	Green
		VM131-01-35Y	**VM151-01-35Y**	**VM133-M5-35Y**	**VM153-M5-35Y**	—	Yellow
		(3 port)	**(5 port)**	**(3 port)**	**(5 port)**	—	

Note 1) Actuator replacement is available for all types except for roller lever, one way roller lever, and 3 position selector.
Note 2) For push button (mushroom), push button (extended), push button (flush) and a single unit of fastening ring, refer to pages 5-6-6 to 5-6-7. The other parts are not replaceable.
Note 3) The handle of the selector (2 position and 3 position) cannot be removed or replaced alone.

How to Order

VM1 3 1 – 01 – 01 S □

Number of ports

2	2 port
3	3 port

Piping direction and the length of push rod

0	Long	Side ported
1	Short	
2	Long	Bottom ported
3	Short	

Port size

01	Rc 1/8
M5	M5 x 0.8 (Female thread)
N01	NPT 1/8
F01	G 1/8

Actuator type

00	Basic
01	Roller lever
02	One way roller lever
05	Straight plunger
06	Roller plunger
07	Cross roller plunger
08	Toggle lever
30	Push button (Mushroom)
32	Push button (Extended)
33	Push button (Flush)
34	Twist selector (2 position)
36	Key selector (2 position)
35	Twist selector (3 position)

Suffix for actuator

S	Hard steel roller	
R	Red	Color of push button selector
B	Black	
G	Green	
Y	Yellow	

Suffix for indicator light

Z	With miniature indicator light (Bottom piping type only)

Actuator \ Height of rod push		Side ported		Bottom ported	
		Long	Short	Long	Short
		0	1	2	3
Basic	00	○	○	○	○
Roller lever	01	x	○	x	○
One way roller lever	02	x	○	x	○
Straight plunger	05	○	x	○	x
Roller plunger	06	○	x	○	x
Cross roller plunger	07	○	x	○	x
Toggle lever	08	○	x	○	x
Push button (Mushroom)	30	○	x	○	x
Push button (Extended)	32	○	x	○	x
Push button (Flush)	33	○	x	○	x
Twist selector (2 position)	34	○	x	○	x
Key selector (2 position)	36	○	x	○	x
Twist selector (3 position)	35	x	○	x	○

Combination possible: ○, Combination impossible: x

Construction

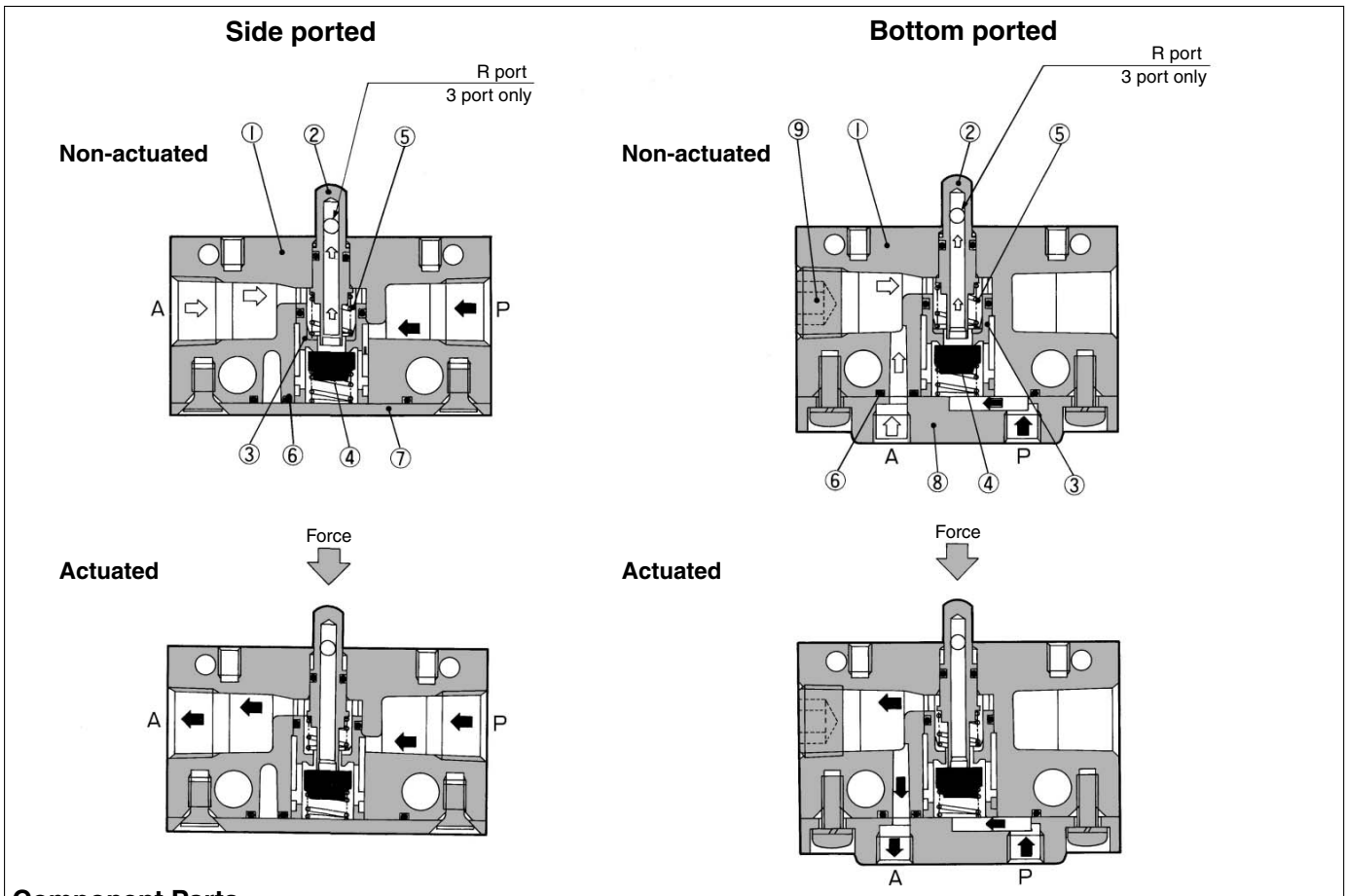

Component Parts

No.	Description	Material	Note
①	Valve	ZDC	Metallic plated
②	Plunger	POM	
③	Valve sheet	POM	
④	Valve	NBR	
⑤	Spring	Stainless steel	
⑥	Gasket	NBR	
⑦	Cover	Rolled steel	
⑧	Sub-plate	ZDC	Metallic plated
⑨	Hexagon socket head plug	Rolled steel	

Series VM100/Side Ported

Basic

VM120-01-00
VM130-01-00
VM121-01-00
VM131-01-00

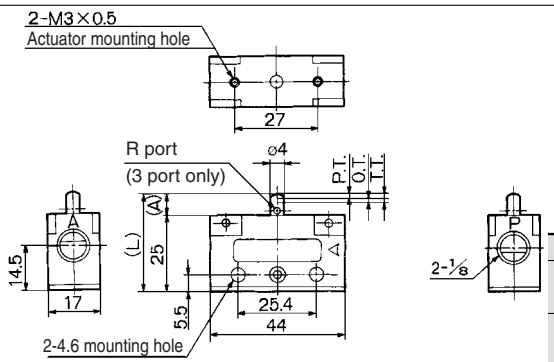

Model	L	A
VM120-01-00 VM130-01-00	32.5	7.5
VM121-01-00 VM131-01-00	28.5	3.5

JIS Symbol

2 port

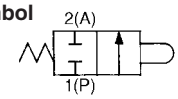

3 port

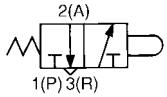

∗ 0.5 MPa supply

F.O.F. ∗	20 N
P.T.	1.5 mm
O.T.	1.5 mm
T.T.	3.0 mm

Roller lever

VM121-01-01
VM131-01-01
VM121-01-01S
VM131-01-01S

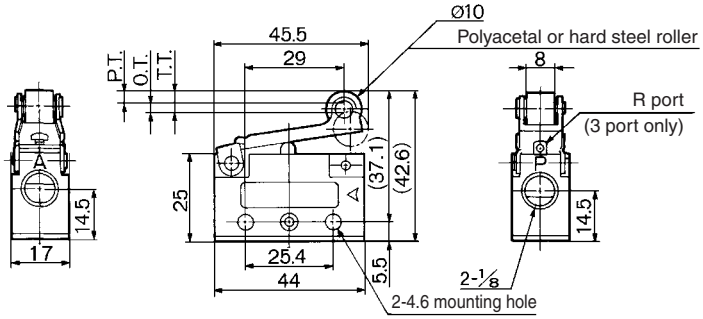

JIS Symbol

2 port

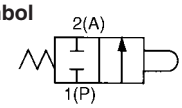

3 port

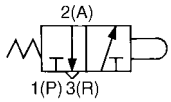

∗ 0.5 MPa supply

F.O.F. ∗	10 N
P.T.	3.2 mm
O.T.	2.3 mm
T.T.	5.5 mm

One way roller lever

VM121-01-02
VM131-01-02
VM121-01-02S
VM131-01-02S

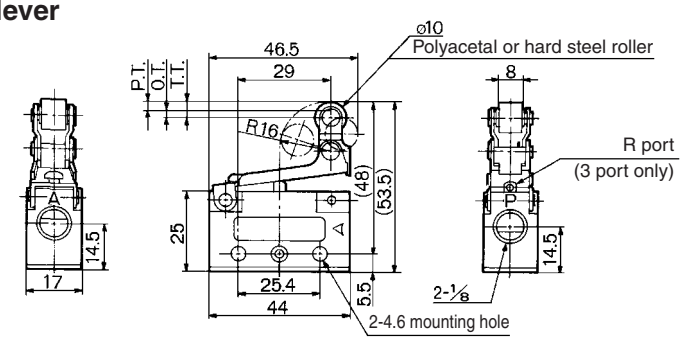

JIS Symbol

2 port

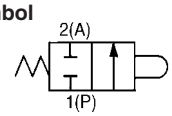

3 port

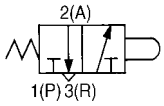

∗ 0.5 MPa supply

F.O.F. ∗	10 N
P.T.	3.2 mm
O.T.	2.3 mm
T.T.	5.5 mm

Straight plunger

VM120-01-05
VM130-01-05

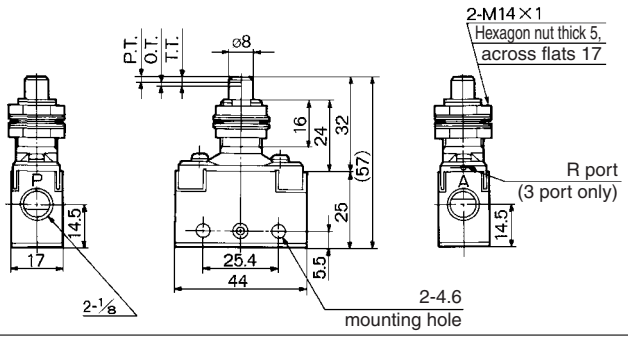

Panel mounting hole

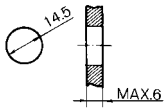

JIS Symbol

2 port

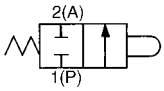

3 port

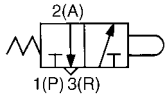

∗ 0.5 MPa supply

F.O.F. ∗	23 N
P.T.	2.0 mm
O.T.	1.5 mm
T.T.	3.5 mm

Roller plunger

VM120-01-06
VM130-01-06
VM120-01-06S
VM130-01-06S

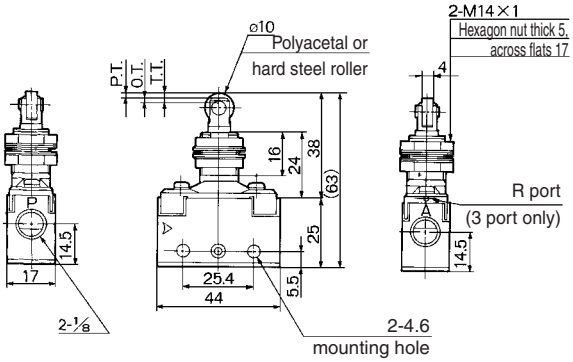

Panel mounting hole

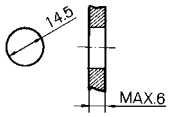

JIS Symbol

2 port

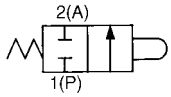

3 port

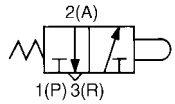

∗ 0.5 MPa supply

F.O.F. ∗	23 N
P.T.	2.0 mm
O.T.	1.5 mm
T.T.	3.5 mm

Series VM100/Side Ported

Cross roller plunger

VM120-01-07
VM130-01-07
VM120-01-07S
VM130-01-07S

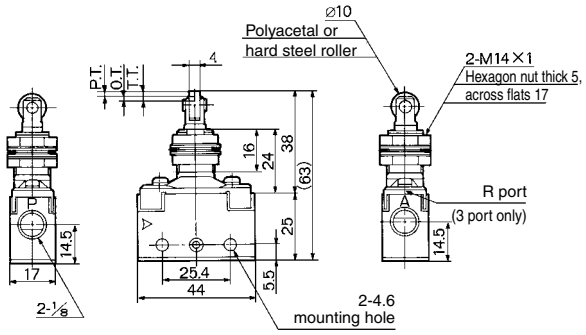

Panel mounting hole

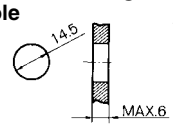

JIS Symbol

2 port

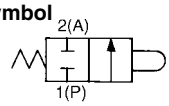

3 port

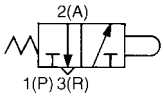

∗ 0.5 MPa supply

F.O.F. ∗	23 N
P.T.	2 mm
O.T.	1.5 mm
T.T.	3.5 mm

Toggle lever

VM120-01-08
VM130-01-08

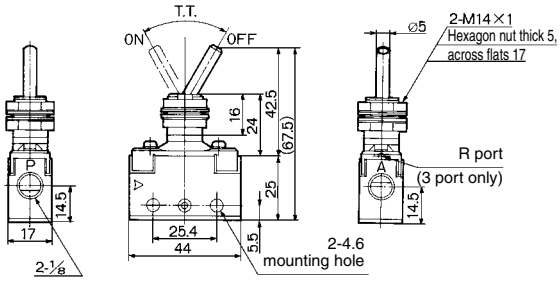

Panel mounting hole

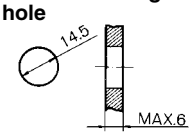

JIS Symbol

2 port

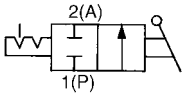

3 port

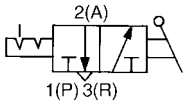

∗ 0.5 MPa supply

F.O.F. ∗	10 N
T.T.	60°

Push button (Mushroom)

VM120-01-30R/B/G/Y
VM130-01-30R/B/G/Y

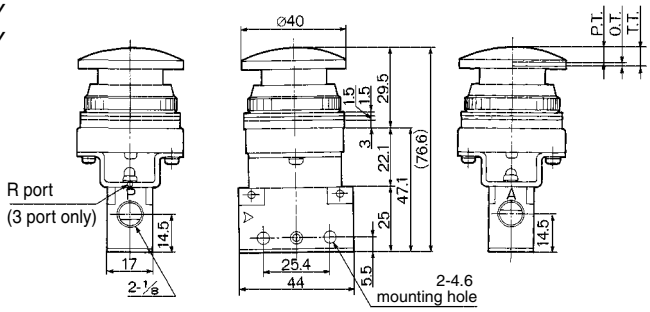

Panel mounting hole

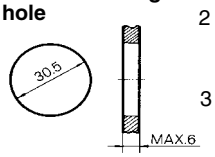

JIS Symbol

2 port

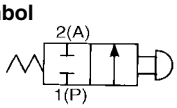

3 port

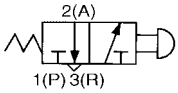

∗ 0.5 MPa supply

F.O.F. ∗	21 N
P.T.	4.9 mm
O.T.	1.6 mm
T.T.	6.5 mm

Push button (Extended)

VM120-01-32R/B/G/Y
VM130-01-32R/B/G/Y

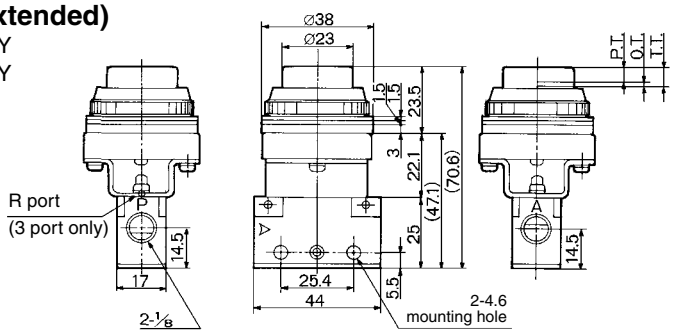

Panel mounting hole

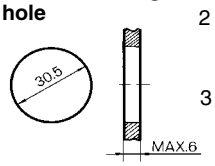

JIS Symbol

2 port

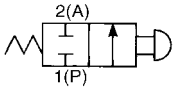

3 port

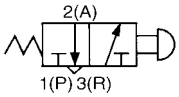

∗ 0.5 MPa supply

F.O.F. ∗	21 N
P.T.	4.9 mm
O.T.	1.6 mm
T.T.	6.5 mm

Push button (Flush)

VM120-01-33
VM130-01-33

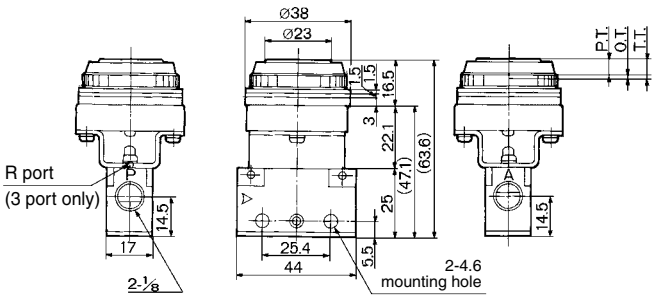

Panel mounting hole

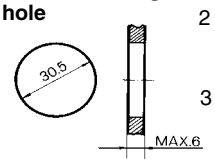

JIS Symbol

2 port

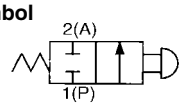

3 port

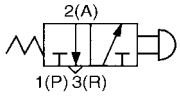

∗ 0.5 MPa supply

F.O.F. ∗	21 N
P.T.	4.9 mm
O.T.	1.6 mm
T.T.	6.5 mm

Series VM100/Side Ported

Twist selector (2 position)

VM120-01-34R/B/G/Y
VM130-01-34R/B/G/Y

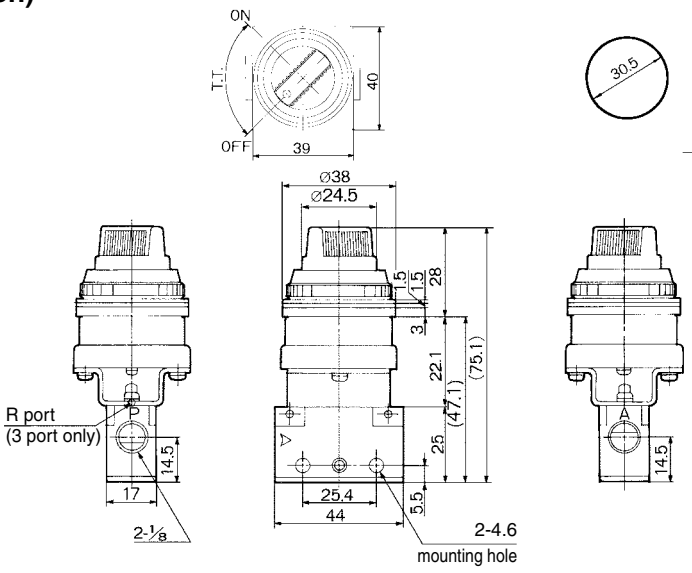

Panel mounting hole

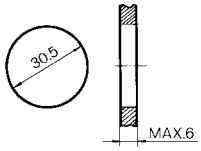

JIS Symbol

2 port

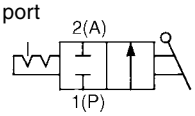

3 port

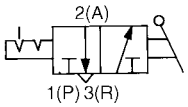

∗ 0.5 MPa supply

F.O.F. ∗	15 N
T.T.	90°

Key selector (2 position)

VM120-01-36
VM130-01-36

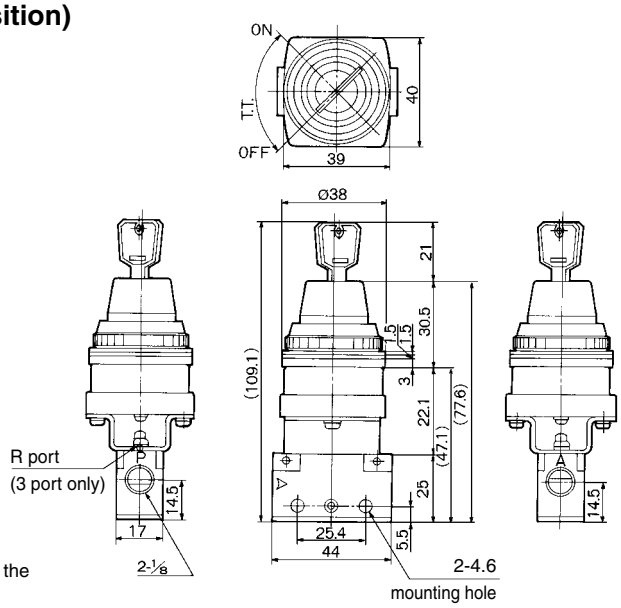

Panel mounting hole

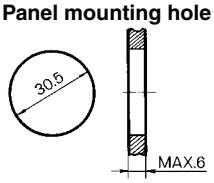

JIS Symbol

2 port

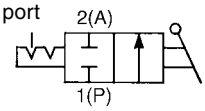

3 port

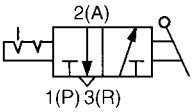

Key can be removed at the "on" and "off" positions.

∗ 0.5 MPa supply

F.O.F. ∗	15 N
T.T.	90°

Twist selector (3 position)

VM131-01-35R/B/G/Y
VM151-01-35R/B/G/Y

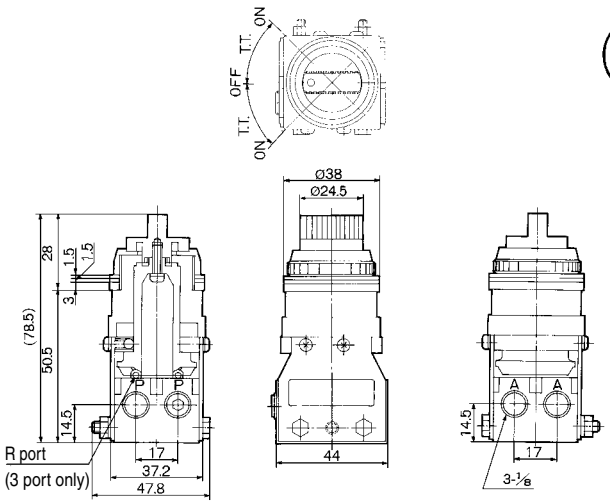

Panel mounting hole

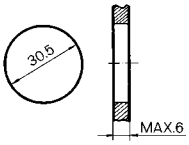

JIS Symbol

3 port

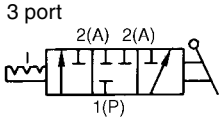

5 port

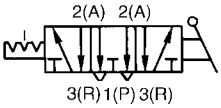

∗ 0.5 MPa supply

F.O.F. ∗	15 N
T.T.	45°

Series VM100/Bottom Ported

Basic
VM122-M5-00
VM132-M5-00
VM123-M5-00
VM133-M5-00

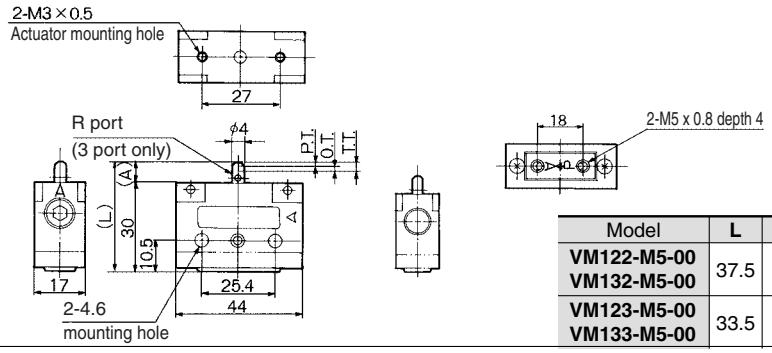

Model	L	A
VM122-M5-00 VM132-M5-00	37.5	7.5
VM123-M5-00 VM133-M5-00	33.5	3.5

JIS Symbol
2 port
3 port

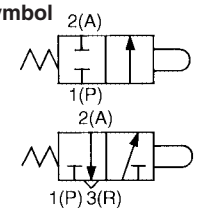

∗ 0.5 MPa supply

F.O.F. ∗	20 N
P.T.	1.5 mm
O.T.	1.5 mm
T.T.	3.0 mm

Roller lever
VM123-M5-01
VM133-M5-01
VM123-M5-01S
VM133-M5-01S

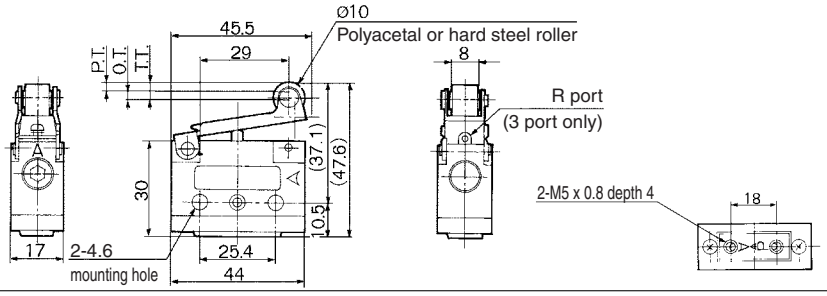

JIS Symbol
2 port
3 port

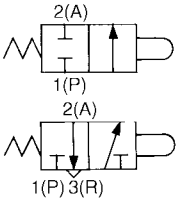

∗ 0.5 MPa supply

F.O.F. ∗	10 N
P.T.	3.2 mm
O.T.	2.3 mm
T.T.	5.5 mm

One way roller lever
VM123-M5-02
VM133-M5-02
VM123-M5-02S
VM133-M5-02S

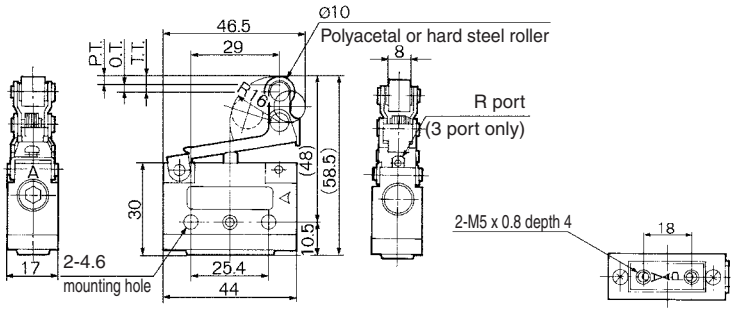

JIS Symbol
2 port
3 port

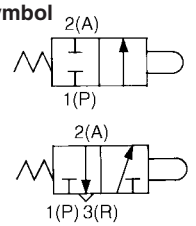

∗ 0.5 MPa supply

F.O.F. ∗	10 N
P.T.	3.2 mm
O.T.	2.3 mm
T.T.	5.5 mm

Straight plunger
VM122-M5-05
VM132-M5-05

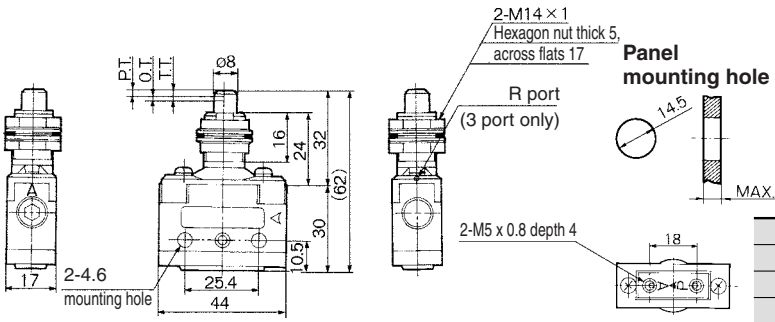

JIS Symbol
2 port
3 port

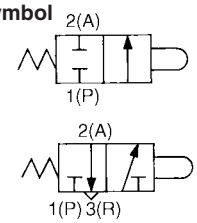

∗ 0.5 MPa supply

F.O.F. ∗	23 N
P.T.	2.0 mm
O.T.	1.5 mm
T.T.	3.5 mm

Roller plunger
VM122-M5-06
VM132-M5-06
VM122-M5-06S
VM132-M5-06S

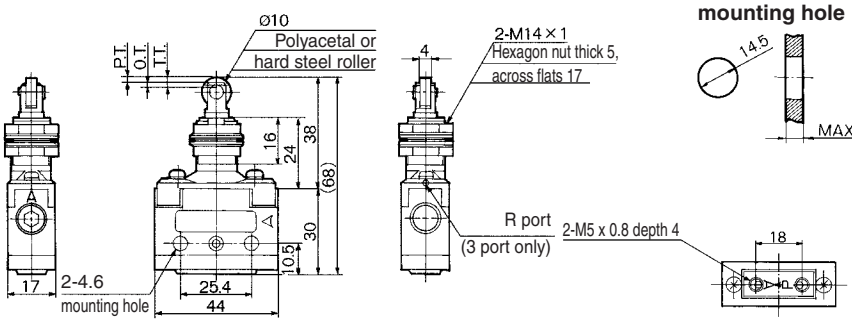

JIS Symbol
2 port
3 port

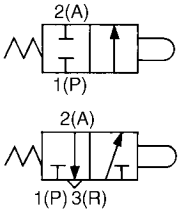

∗ 0.5 MPa supply

F.O.F. ∗	23 N
P.T.	2.0 mm
O.T.	1.5 mm
T.T.	3.5 mm

Series VM100/Bottom Ported

Cross roller plunger

VM122-M5-07
VM132-M5-07
VM122-M5-07S
VM132-M5-07S

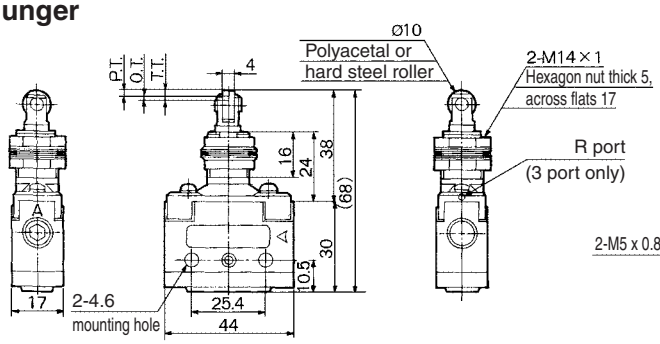

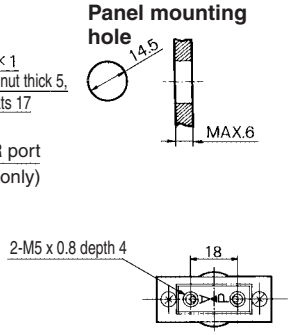

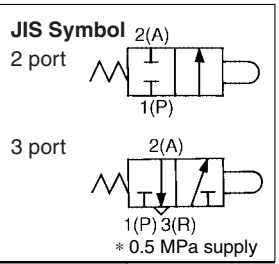

∗ 0.5 MPa supply

F.O.F. ∗	23 N
P.T.	2 mm
O.T.	1.5 mm
T.T.	3.5 mm

Toggle lever

VM122-M5-08
VM132-M5-08

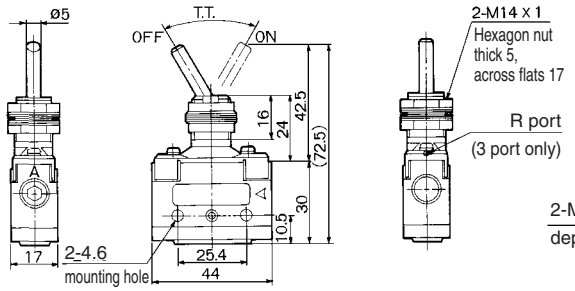

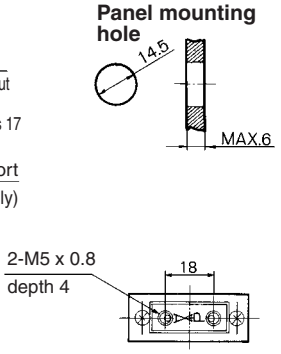

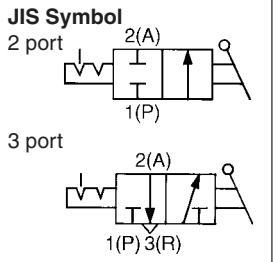

∗ 0.5 MPa supply

F.O.F. ∗	10 N
P.T.	60°

Push button (Mushroom)

VM122-M5-30R/B/G/Y
VM132-M5-30R/B/G/Y

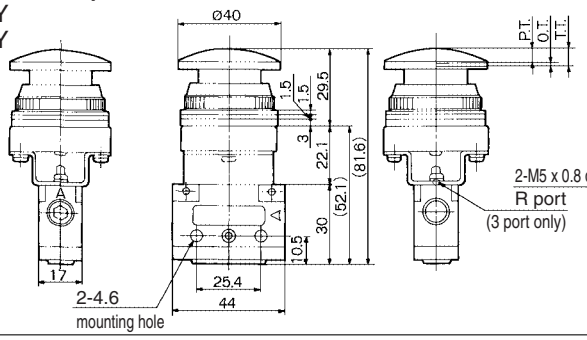

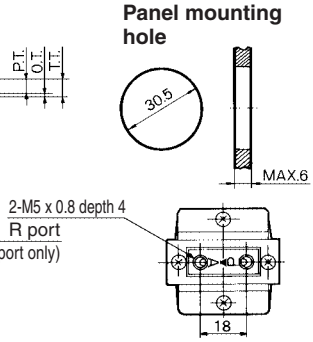

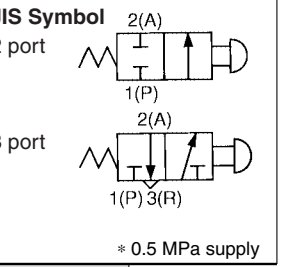

∗ 0.5 MPa supply

F.O.F. ∗	21 N
P.T.	4.9 mm
O.T.	1.6 mm
T.T.	6.5 mm

Push button (Extended)

VM122-M5-32R/B/G/Y
VM132-M5-32R/B/G/Y

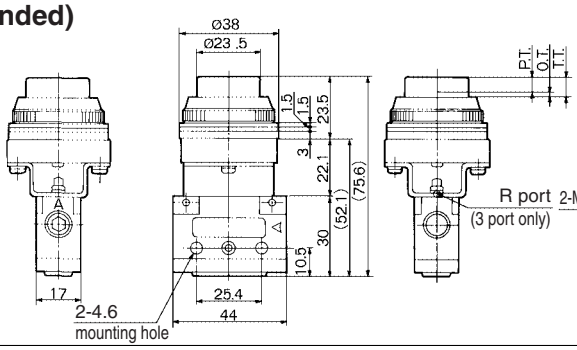

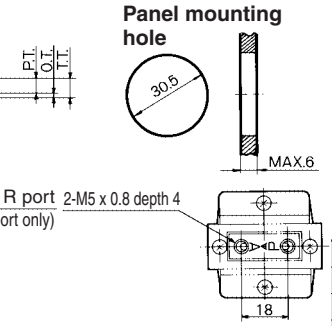

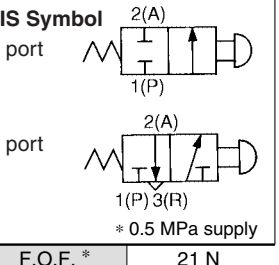

∗ 0.5 MPa supply

F.O.F. ∗	21 N
P.T.	4.9 mm
O.T.	1.6 mm
T.T.	6.5 mm

Push button (Flush)

VM122-M5-33
VM132-M5-33

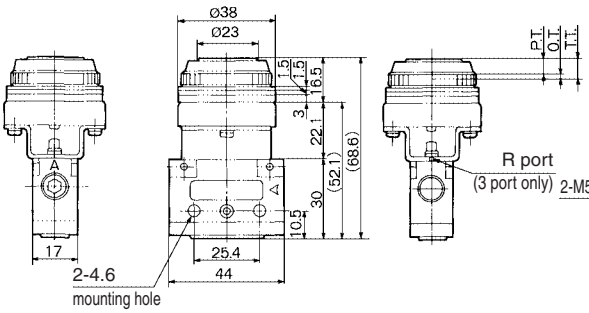

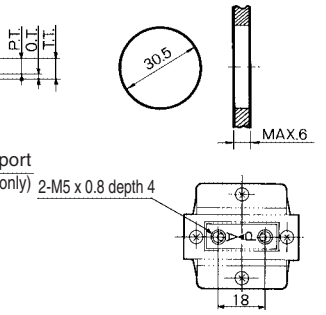

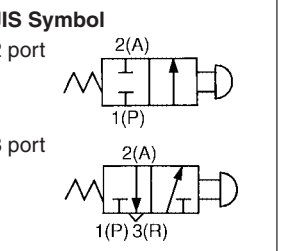

∗ 0.5 MPa supply

F.O.F. ∗	21 N
P.T.	4.9 mm
O.T.	1.6 mm
T.T.	6.5 mm

Series VM100/Bottom Ported

Twist selector (2 position)

VM122-M5-34R/B/G/Y
VM132-M5-34R/B/G/Y

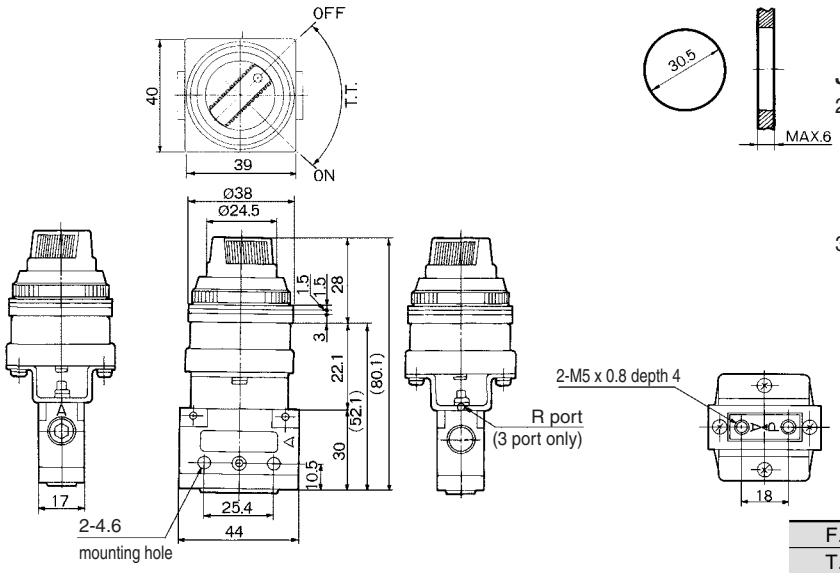

Panel mounting hole

JIS Symbol

2 port

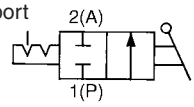

3 port

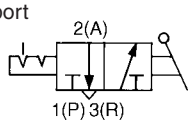

∗ 0.5 MPa supply

F.O.F. ∗	15 N
T.T.	90°

Key selector (2 position)

VM122-M5-36
VM132-M5-36

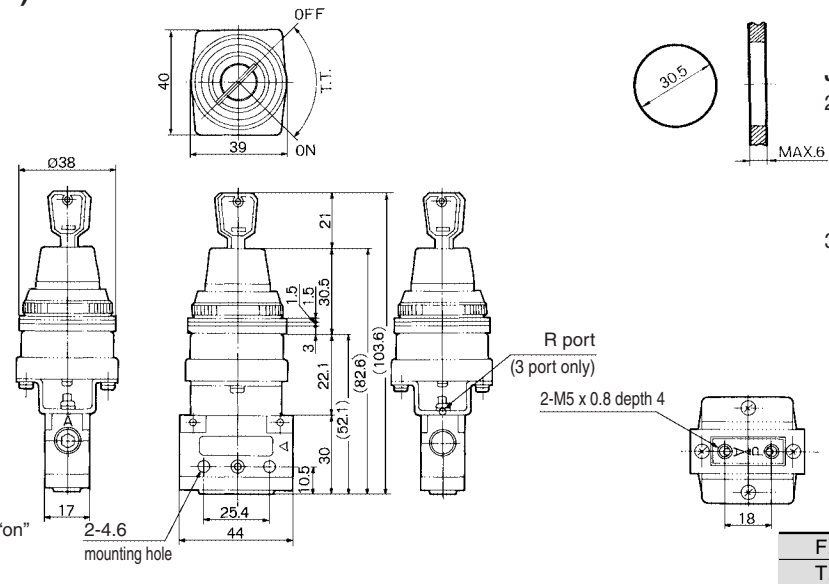

Key can be removed at the "on" and "off" positions.

Panel mounting hole

JIS Symbol

2 port

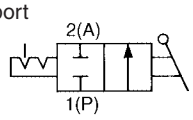

3 port

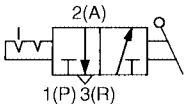

∗ 0.5 MPa supply

F.O.F. ∗	15 N
T.T.	90°

Twist selector (3 position)

VM133-M5-35R/B/G/Y
VM153-M5-35R/B/G/Y

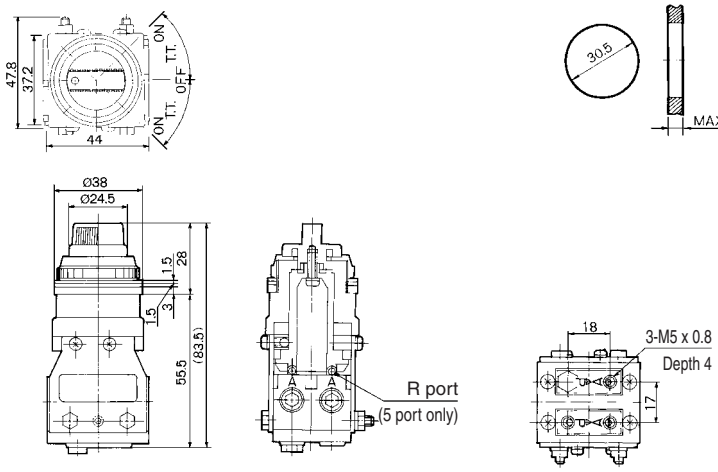

Panel mounting hole

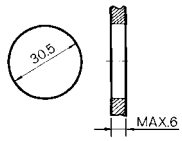

JIS Symbol

3 port

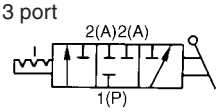

5 port

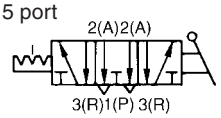

∗ 0.5 MPa supply

F.O.F. ∗	20 N
T.T.	45°

2/3 Port Mechanical Valve
Series VM200

Large flow capacity.
A variety of actuator types.

Specifications

Fluid	Air/Inert gas
Operating pressure	0 to 1.0 MPa
Ambient and fluid temperature	–5 to 60°C (No freezing)
Effective area	19 mm²
Lubrication	Not required (Use turbine oil Class 1 ISO VG32, if lubricated.)
Port size	1/4
Weight (Basic)	111 g

Model

	Actuator \ No. of ports	2 port	3 port	Actuator part no.	Application
Mechanical operation	Basic	**VM220-02-00**	**VM230-02-00**	—	—
	Roller lever	**VM220-02-01**	**VM230-02-01**	VM-01A	Polyacetal roller
		VM220-02-01S	**VM230-02-01S**	VM-01AS	Hard steel roller
	One way roller lever	**VM220-02-02**	**VM230-02-02**	VM-02A	Polyacetal roller
		VM220-02-02S	**VM230-02-02S**	VM-02AS	Hard steel roller
	Straight plunger	**VM220-02-05**	**VM230-02-05**	VM-05A	—
	Roller plunger	**VM220-02-06**	**VM230-02-06**	VM-06A	Polyacetal roller
		VM220-02-06S	**VM230-02-06S**	VM-06AS	Hard steel roller
	Cross roller plunger	**VM220-02-07**	**VM230-02-07**	VM-07A	Polyacetal roller
		VM220-02-07S	**VM230-02-07S**	VM-07AS	Hard steel roller
Manual operation	Toggle lever	**VM220-02-08**	**VM230-02-08**	VM-08A	—
	Push button (Mushroom)	**VM220-02-30R**	**VM230-02-30R**	VM-30AR	Red
		VM220-02-30B	**VM230-02-30B**	VM-30AB	Black
		VM220-02-30G	**VM230-02-30G**	VM-30AG	Green
		VM220-02-30Y	**VM230-02-30Y**	VM-30AY	Yellow
	Push button (Extended)	**VM220-02-32R**	**VM230-02-32R**	VM-32AR	Red
		VM220-02-32B	**VM230-02-32B**	VM-32AB	Black
		VM220-02-32G	**VM230-02-32G**	VM-32AG	Green
		VM220-02-32Y	**VM230-02-32Y**	VM-32AY	Yellow
	Push button (Flush)	**VM220-02-33**	**VM230-02-33**	VM-33A	With a set of red, black, green, yellow
	Twist selector (2 position)	**VM220-02-34R**	**VM230-02-34R**	VM-34AR	Red
		VM220-02-34B	**VM230-02-34B**	VM-34AB	Black
		VM220-02-34G	**VM230-02-34G**	VM-34AG	Green
		VM220-02-34Y	**VM230-02-34Y**	VM-34AY	Yellow
	Key selector (2 position)	**VM220-02-36**	**VM230-02-36**	VM-36A	—
	Twist selector (3 position)	**VM230-02-35R**	**VM250-02-35R**	—	Red
		VM230-02-35B	**VM250-02-35B**	—	Black
		VM230-02-35G	**VM250-02-35G**	—	Green
		VM230-02-35Y	**VM250-02-35Y**	—	Yellow
		(3 port)	**(5 port)**	—	—
	Foot pedal	**VM220-02-40**	**VM230-02-40**	—	—

Note 1) Actuator replacement is available for all types except twist selector (3 position) and foot pedal.
Note 2) For push button (mushroom), push button (extended), push button (flush) and a single unit of fastening ring, refer to pages 5-6-6 to 5-6-7. The other parts are not replaceable.
Note 3) The handle of the selector (2 position and 3 position) cannot be removed or replaced alone.

How to Order

VM2 3 0 – 02 – 01 S

Number of ports

2	2 port
3	3 port

Port size

02	Rc 1/4
N02	NPT 1/4
F02	G 1/4

Actuator type

00	Basic
01	Roller lever
02	One way roller lever
05	Straight plunger
06	Roller plunger
07	Cross roller plunger
08	Toggle lever
30	Push button (Mushroom)
32	Push button (Extended)
33	Push button (Flush)
34	Twist selector (2 position)
36	Key selector (2 position)
35	Twist selector (3 position)
40	Foot pedal

Suffix for actuator

S	Hard steel roller	
R	Red	Color of push button selector
B	Black	
G	Green	
Y	Yellow	

Construction

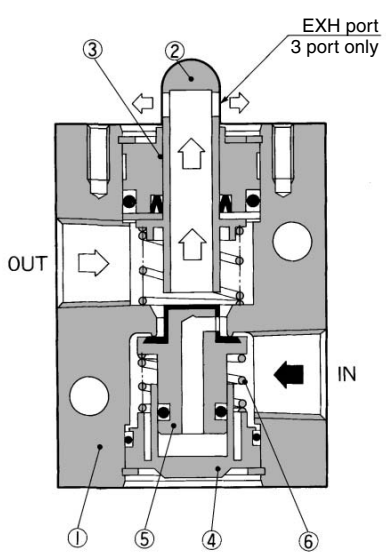

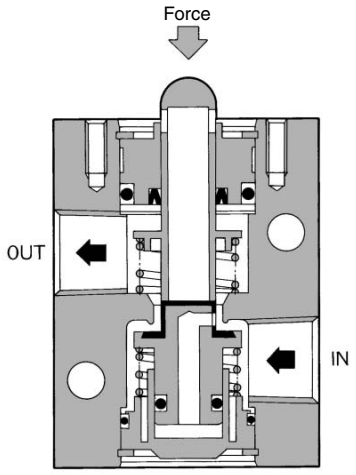

Component Parts

No.	Description	Material	Note
①	Valve	ADC	Metallic plated
②	Plunger	POM	
③	Plunger retainer	PBT	
④	Cover	POM	
⑤	Valve	Brass, NBR	
⑥	Spring	Steel	

Series VM200

Basic
VM220-02-00
VM230-02-00

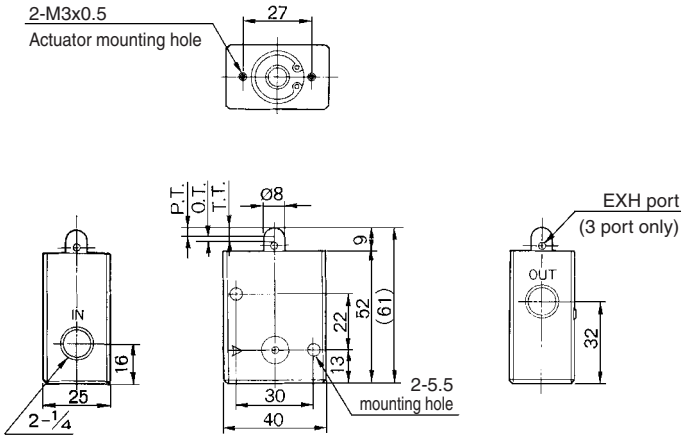

JIS Symbol

2 port

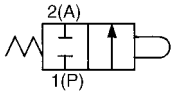

3 port

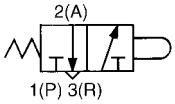

∗ 0.5 MPa supply

F.O.F. ∗	52 N
P.T.	3.0 mm
O.T.	2.0 mm
T.T.	5.0 mm

Roller lever
VM220-02-01
VM230-02-01
VM220-02-01S
VM230-02-01S

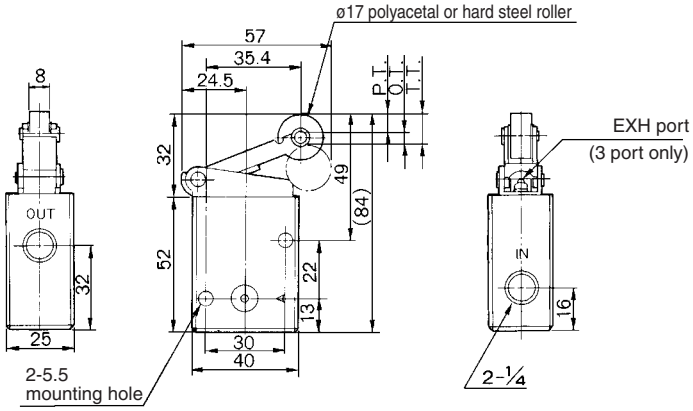

JIS Symbol

2 port

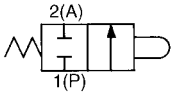

3 port

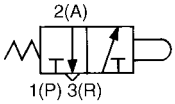

∗ 0.5 MPa supply

F.O.F. ∗	24 N
P.T.	6.5 mm
O.T.	4.5 mm
T.T.	11.0 mm

One way roller lever
VM220-02-02
VM230-02-02
VM220-02-02S
VM230-02-02S

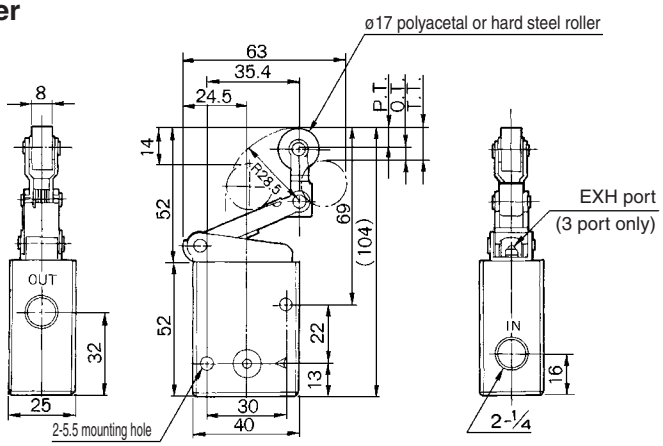

JIS Symbol

2 port

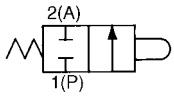

3 port

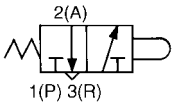

∗ 0.5 MPa supply

F.O.F. ∗	22 N
P.T.	7.0 mm
O.T.	5.0 mm
T.T.	12.0 mm

Straight plunger
VM220-02-05
VM230-02-05

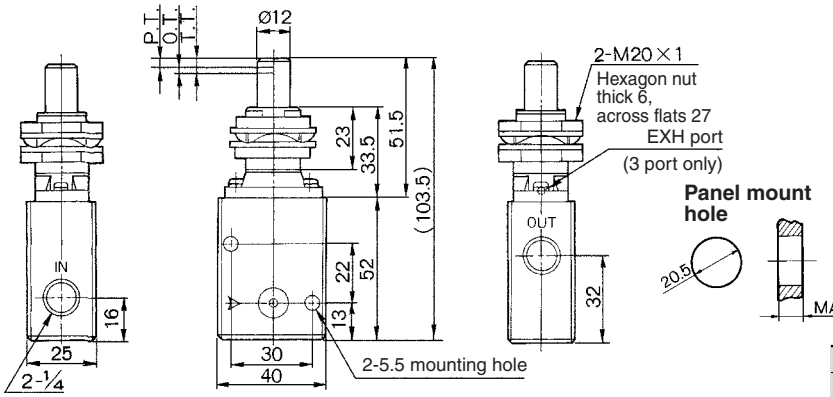

JIS Symbol

2 port

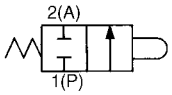

3 port

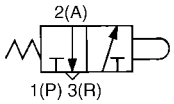

∗ 0.5 MPa supply

F.O.F. ∗	56 N
P.T.	3.5 mm
O.T.	2.0 mm
T.T.	5.5 mm

Series VM200

Roller plunger

VM220-02-06
VM230-02-06
VM220-02-06S
VM230-02-06S

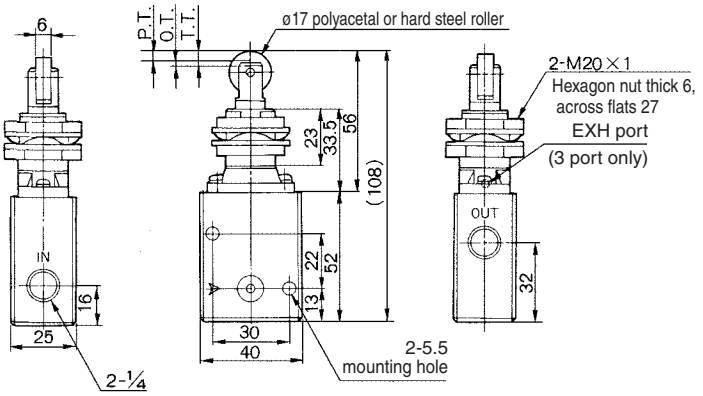

JIS Symbol

2 port

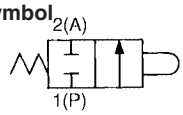

3 port

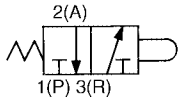

∗ 0.5 MPa supply

F.O.F. ∗	56 N
P.T.	3.5 mm
O.T.	2.0 mm
T.T.	5.5 mm

Cross roller plunger

VM220-02-07
VM230-02-07
VM220-02-07S
VM230-02-07S

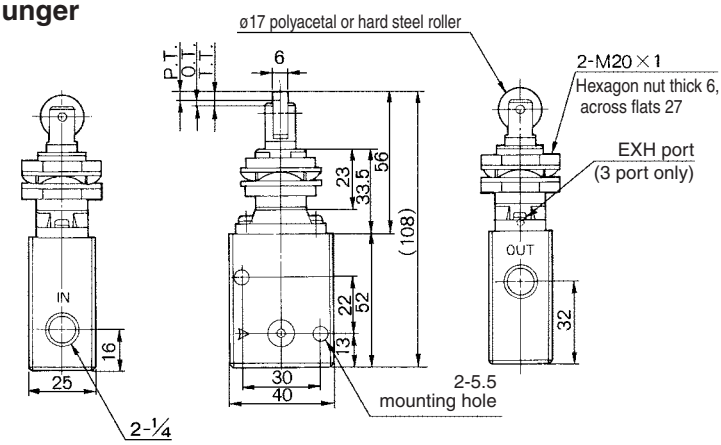

JIS Symbol

2 port

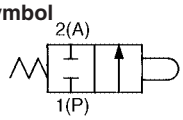

3 port

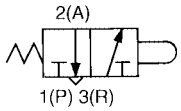

∗ 0.5 MPa supply

F.O.F. ∗	56 N
P.T.	3.5 mm
O.T.	2.0 mm
T.T.	5.5 mm

Toggle lever

VM220-02-08
VM230-02-08

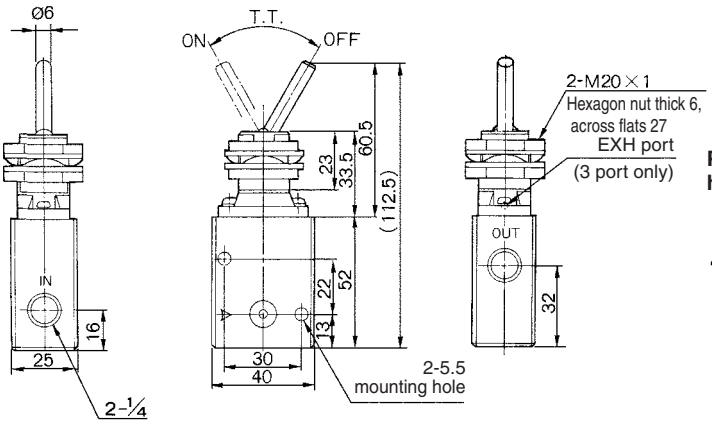

JIS Symbol

2 port

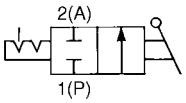

3 port

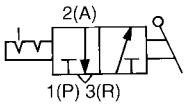

∗ 0.5 MPa supply

F.O.F. ∗	12 N
T.T.	60°

Push button (Mushroom)

VM220-02-30R/B/G/Y
VM230-02-30R/B/G/Y

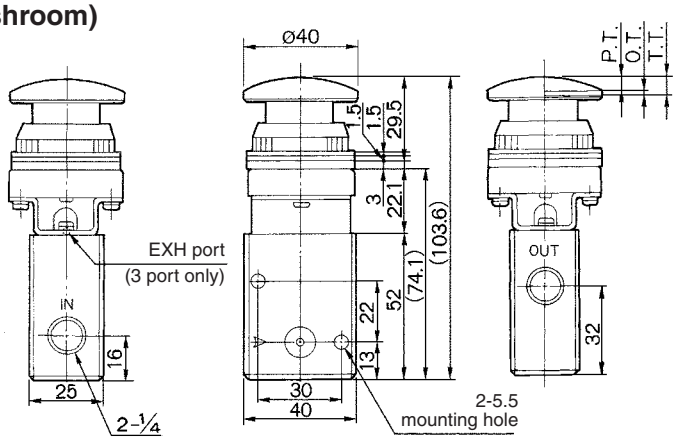

JIS Symbol

2 port

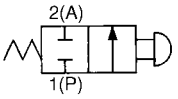

3 port

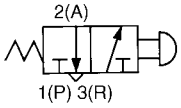

∗ 0.5 MPa supply

F.O.F. ∗	52 N
P.T.	4.9 mm
O.T.	1.6 mm
T.T.	6.5 mm

Series VM200

Push button (Extended)

VM220-02-32R/B/G/Y
VM230-02-32R/B/G/Y

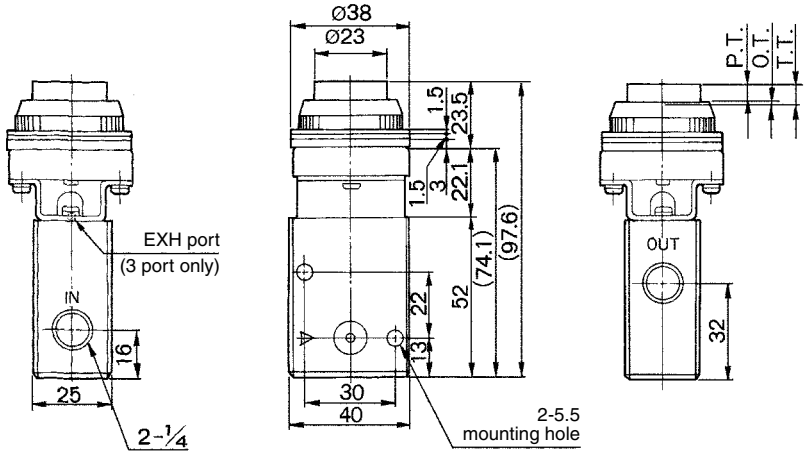

JIS Symbol

2 port

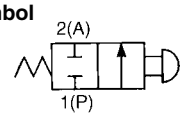

3 port

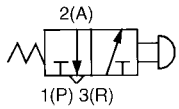

Panel mounting hole

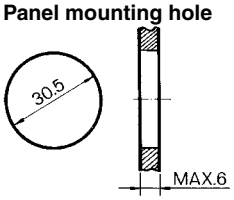

∗ 0.5 MPa supply

F.O.F. ∗	52 N
P.T.	4.9 mm
O.T.	1.6 mm
T.T.	6.5 mm

Push button (Flush)

VM220-02-33
VM230-02-33

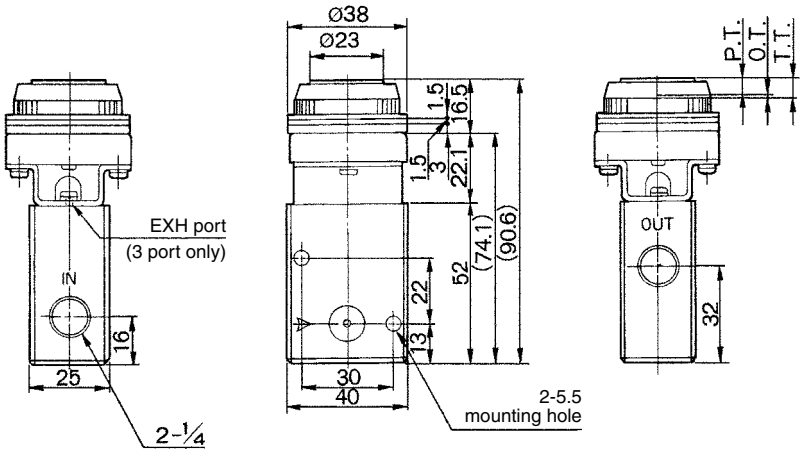

JIS Symbol

2 port

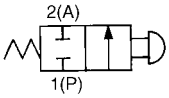

3 port

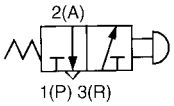

Panel mounting hole

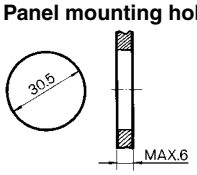

∗ 0.5 MPa supply

F.O.F. ∗	52 N
P.T.	4.9 mm
O.T.	1.6 mm
T.T.	6.5 mm

Twist selector (2 position)

VM220-02-34R/B/G/Y
VM230-02-34R/B/G/Y

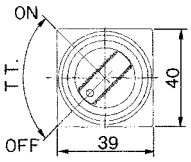

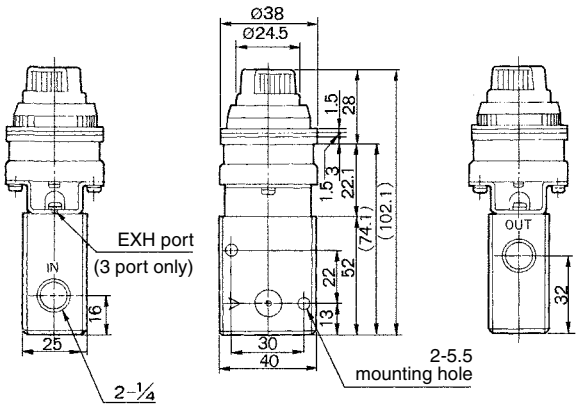

JIS Symbol

2 port

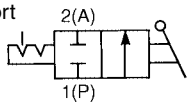

3 port

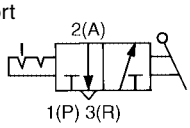

Panel mounting hole

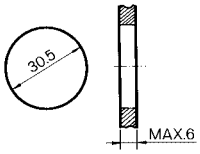

∗ 0.5 MPa supply

F.O.F. ∗	32 N
T.T.	90°

Series VM200

Key selector (2 position)

VM220-02-36
VM230-02-36

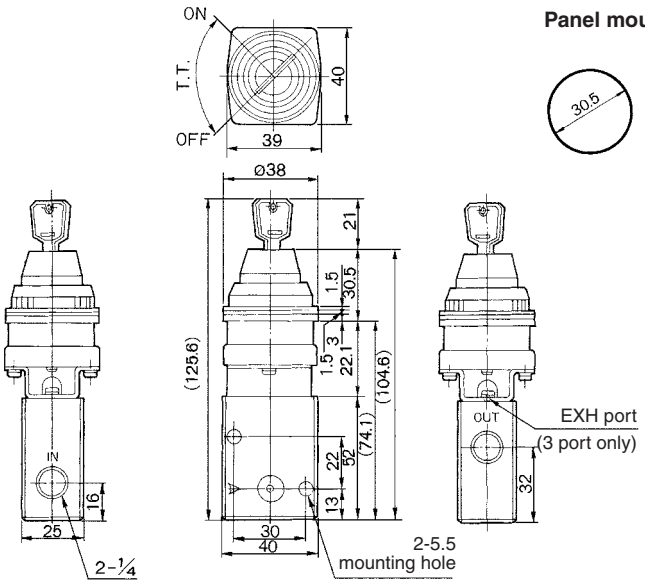

Panel mounting hole

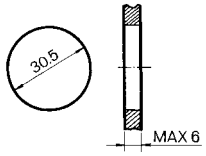

JIS Symbol

2 port

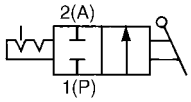

3 port

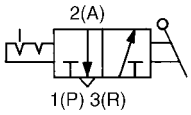

Key can be removed at the "on" and "off" positions.

∗ 0.5 MPa supply

F.O.F. ∗	32 N
T.T.	90°

Twist selector (3 position)

VM230-02-35R/B/G/Y
VM250-02-35R/B/G/Y

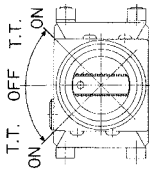

Panel mounting hole

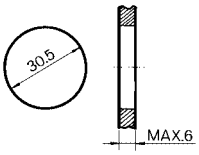

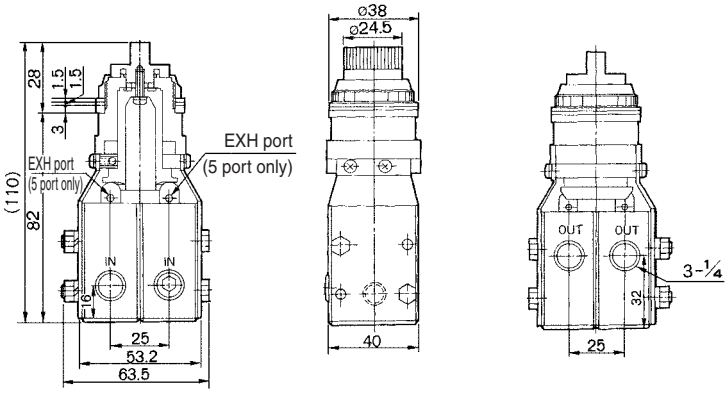

JIS Symbol

2 port

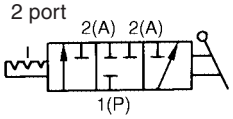

5 port

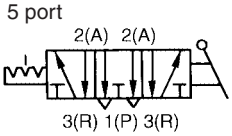

∗ 0.5 MPa supply

F.O.F. ∗	40 N
T.T.	45°

Foot pedal

VM220-02-40
VM230-02-40

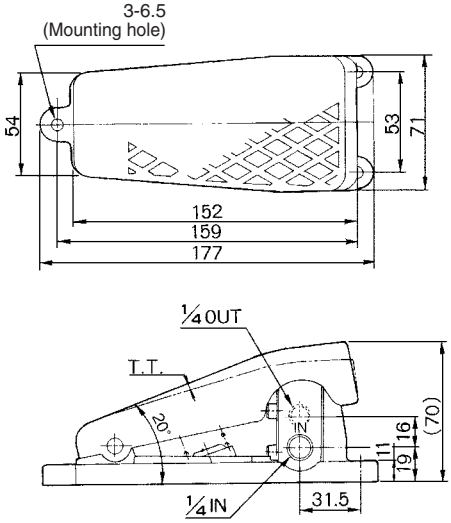

JIS Symbol

2 port

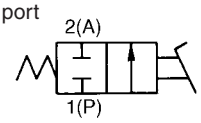

5 port

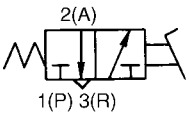

∗ 0.5 MPa supply

F.O.F. ∗	65 N
T.T.	1.2°

3 Port Mechanical Valve
Series VM400

Either N.C. or N.O. is available.

Piping possible to any port.

Proper countermeasures can be taken for applications in which the noise of the exhaust could cause problems to the surroundings.

Specifications

Fluid	Air/Inert gas
Operating pressure	–100 kPa to 1.0 MPa
Ambient and fluid temperature	–5 to 60°C (No freezing)
Effective area	7 mm^2
Lubrication	Not required (Use turbine oil Class 1 ISO VG32, if lubricated)
Port size	1/8
Weight (Basic)	110 g

Model

	Actuator	Model	Actuator part no.	Application
Mechanical operation	Basic	**VM430-01-00**	—	—
	Roller lever	**VM430-01-01**	VM-01A	Polyacetal roller
		VM430-01-01S	VM-01AS	Hard steel roller
	One way roller lever	**VM430-01-02**	VM-02A	Polyacetal roller
		VM430-01-02S	VM-02AS	Hard steel roller
	Straight plunger	**VM430-01-05**	VM-05A	—
	Roller plunger	**VM430-01-06**	VM-06A	Polyacetal roller
		VM430-01-06S	VM-06AS	Hard steel roller
	Cross roller plunger	**VM430-01-07**	VM-07A	Polyacetal roller
		VM430-01-07S	VM-07AS	Hard steel roller
Manual operation	Toggle lever	**VM430-01-08**	VM-08A	—
	Push button (Mushroom)	**VM430-01-30R**	VM-30AR	Red
		VM430-01-30B	VM-30AB	Black
		VM430-01-30G	VM-30AG	Green
		VM430-01-30Y	VM-30AY	Yellow
	Push button (Extended)	**VM430-01-32R**	VM-32AR	Red
		VM430-01-32B	VM-32AB	Black
		VM430-01-32G	VM-32AG	Green
		VM430-01-32Y	VM-32AY	Yellow
	Push button (Flush)	**VM430-01-33**	VM-33A	With a set of red, black, green, yellow
	Twist selector (2 position)	**VM430-01-34R**	VM-34AR	Red
		VM430-01-34B	VM-34AB	Black
		VM430-01-34G	VM-34AG	Green
		VM430-01-34Y	VM-34AY	Yellow
	Key selector (2 position)	**VM430-01-36**	VM-36A	—

Note 1) Actuator replacement is available for all types.
Note 2) For push button (mushroom), push button (extended), push button (flush) and a single unit of fastening ring, refer to pages 5-6-6 to 5-6-7. The other parts are not replaceable.
Note 3) The handle of the selector (2 position) cannot be removed or replaced alone.

How to Order

VM4 3 0 – 01 – 01 S

Number of ports

3	3 port

Port size

01	Rc 1/8
N01	NPT 1/8
F01	G 1/8

Actuator type

00	Basic
01	Roller lever
02	One way roller lever
05	Straight plunger
06	Roller plunger
07	Cross roller plunger
08	Toggle lever
30	Push button (Mushroom)
32	Push button (Extended)
33	Push button (Flush)
34	Twist selector (2 position)
36	Key selector (2 position)

Suffix for actuator

S	Hard steel roller	
R	Red	Color of push button selector
B	Black	
G	Green	
Y	Yellow	

Construction

Non-actuated

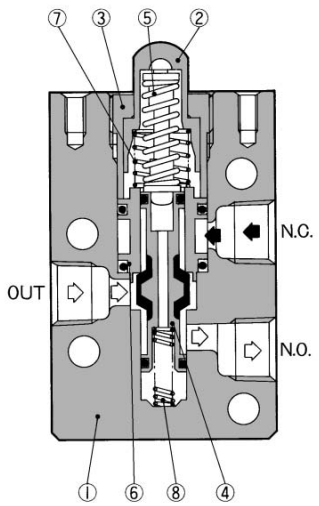

Actuated

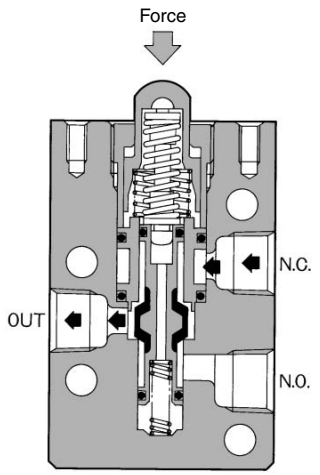

Component Parts

No.	Description	Material	Note
①	Body	ADC	Metallic plated
②	Plunger	POM	
③	Upper lid	Brass	Black zinc chromated
④	Spool valve	Aluminum alloy	Rubber lined

No.	Description	Material	Note
⑤	Over travel spring	Stainless steel	
⑥	Retainer	Brass	
⑦	Spring	Stainless steel	
⑧	Spring	Stainless steel	

Series VM400

Basic
VM430-01-00

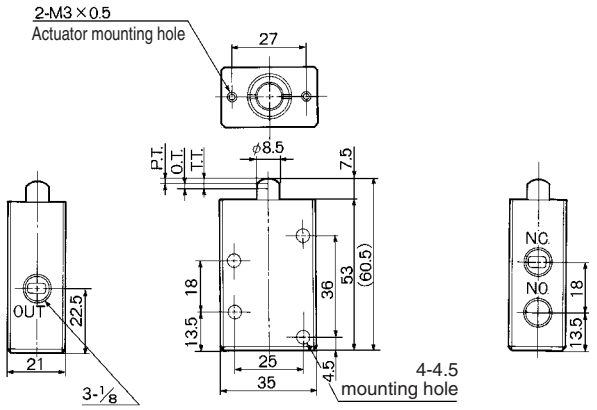

JIS Symbol

F.O.F.	26 N
P.T.	1.5 mm
O.T.	2.0 mm
T.T.	3.5 mm

Roller lever
VM430-01-01
VM430-01-01S

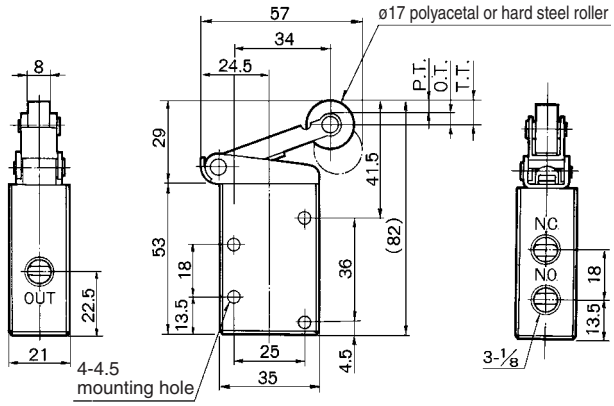

JIS Symbol

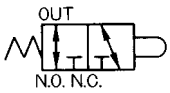

F.O.F.	12 N
P.T.	4.0 mm
O.T.	4.5 mm
T.T.	8.5 mm

One way roller lever
VM430-01-02
VM430-01-02S

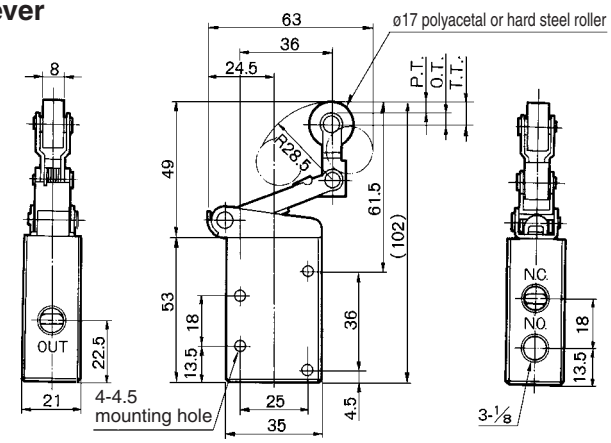

JIS Symbol

F.O.F.	11 N
P.T.	4.0 mm
O.T.	5.0 mm
T.T.	9.0 mm

Straight plunger
VM430-01-05

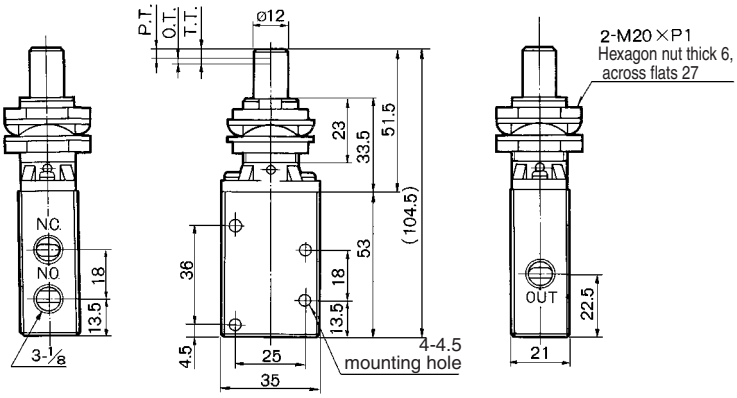

Panel mounting hole

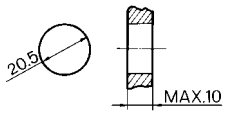

JIS Symbol

F.O.F.	30 N
P.T.	3.5 mm
O.T.	2.0 mm
T.T.	5.5 mm

Series VM400

Roller plunger
VM430-01-06
VM430-01-06S

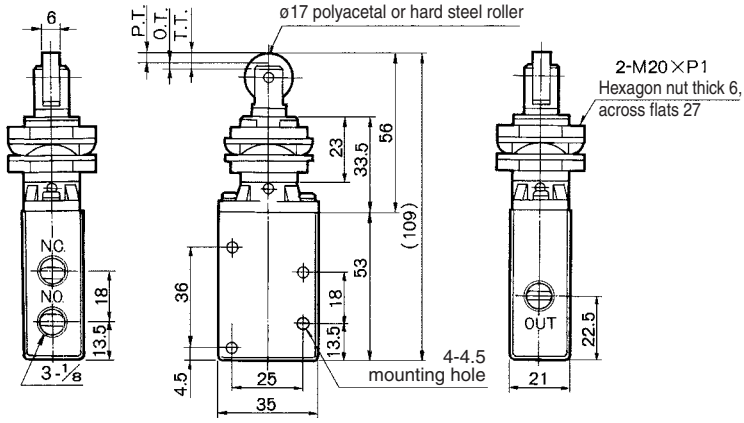

Panel mounting hole

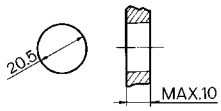

JIS Symbol

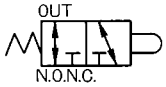

F.O.F.	30 N
P.T.	3.5 mm
O.T.	2.0 mm
T.T.	5.5 mm

Cross roller plunger
VM430-01-07
VM430-01-07S

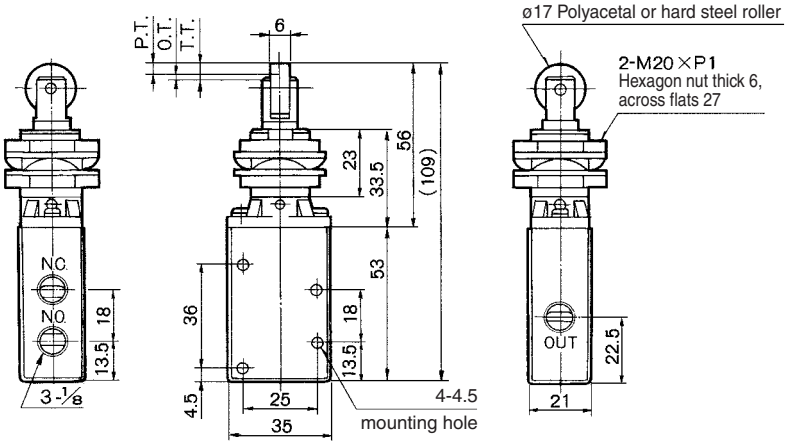

Panel mounting hole

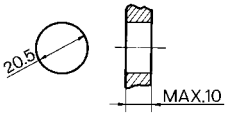

JIS Symbol

F.O.F.	30 N
P.T.	3.5 mm
O.T.	2.0 mm
T.T.	5.5 mm

Toggle lever
VM430-01-08

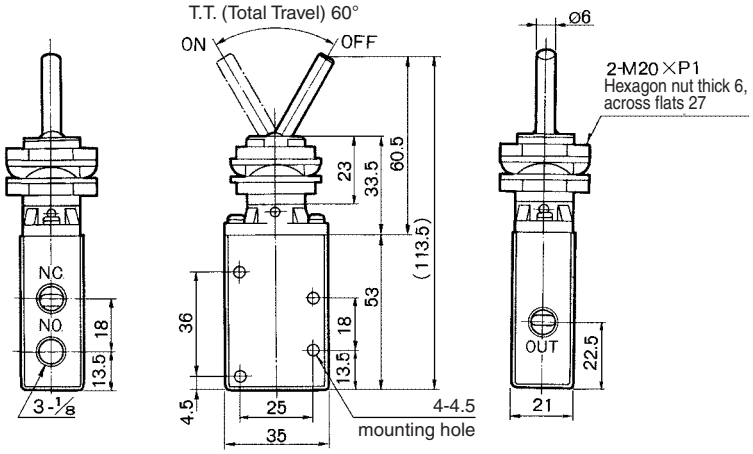

Panel mounting hole

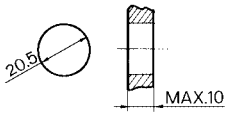

JIS Symbol

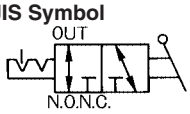

F.O.F.	7 N
T.T.	60°

Push button (Mushroom)
VM430-01-30R/B/G/Y

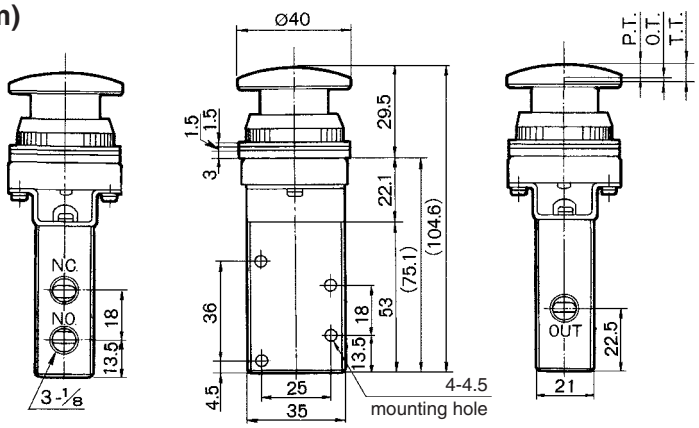

Panel mounting hole

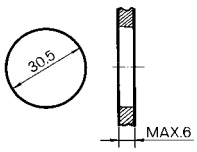

JIS Symbol

F.O.F.	26 N
P.T.	4.6 mm
O.T.	1.6 mm
T.T.	6.5 mm

Series VM400

Push button (Extended)
VM430-01-32R/B/G/Y

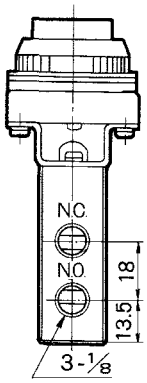

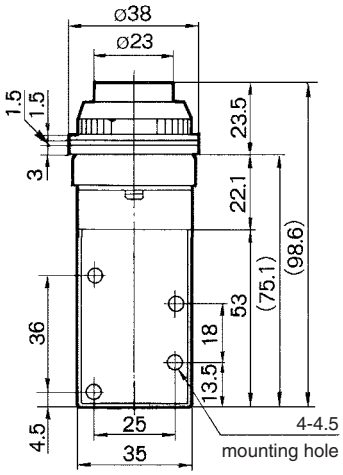

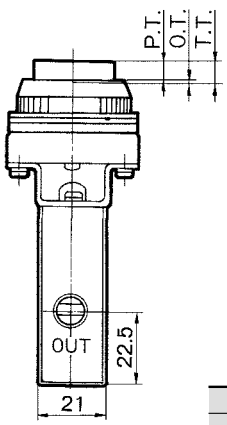

Panel mounting hole

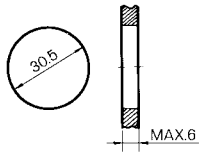

JIS Symbol

F.O.F.	26 N
P.T.	5.4 mm
O.T.	1.6 mm
T.T.	6.5 mm

Push button (Flush)
VM430-01-33

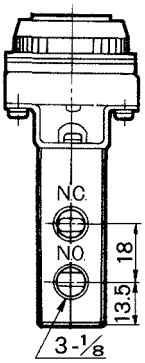

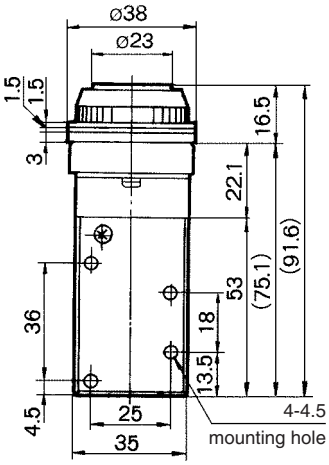

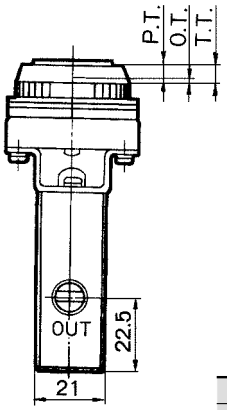

Panel mounting hole

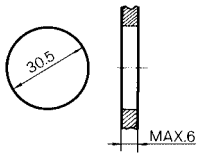

JIS Symbol

F.O.F.	26 N
P.T.	4.9 mm
O.T.	1.6 mm
T.T.	6.5 mm

Twist selector (2 position)
VM430-01-34R/B/G/Y

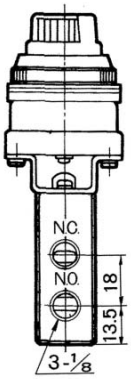

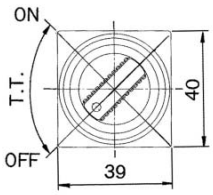

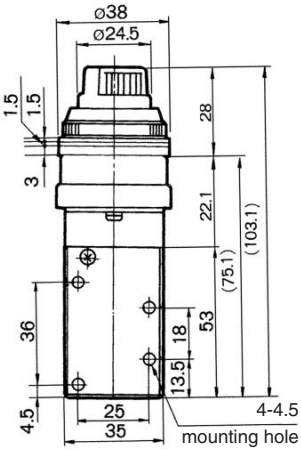

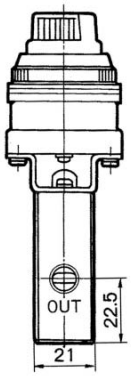

Panel mounting hole

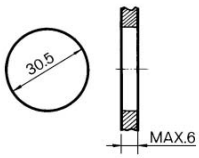

JIS Symbol

F.O.F.	20 N
T.T.	90°

Series VM400

Key selector (2 position)

VM430-01-36

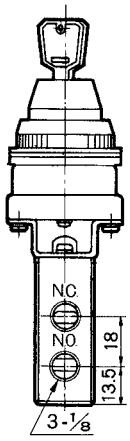

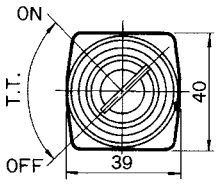

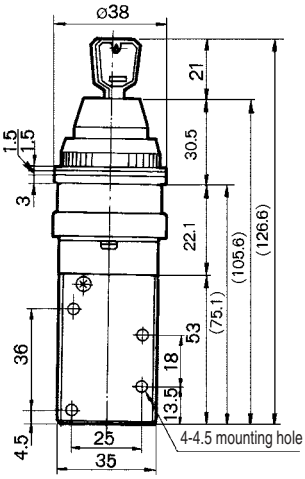

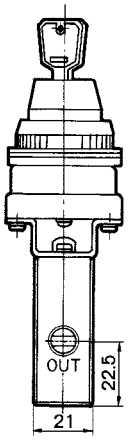

Panel mounting hole

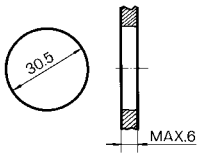

JIS Symbol

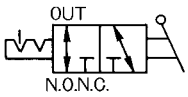

Key can be removed at the "on" and "off" positions.

F.O.F.	20 N
T.T.	90°

3 Port Mechanical Valve: Heavy Duty Type

Series VM800

Sturdy construction.

Either N.C. or N.O. is available.

Piping possible to any port.

Proper countermeasures can be taken for applications in which the noise of the exhaust could cause problems to the surroundings.

Many actuator positions and orientation options.

Specifications

Fluid	Air/Inert gas
Operating pressure	–100 kPa to 1.0 MPa
Ambient and fluid temperature	–5 to 60°C (No freezing)
Effective area	6 mm²
Lubrication	Not required (Use turbine oil Class 1 ISO VG32, if lubricated.)
Port size	1/8
Weight (Basic)	180 g

Model

Actuator	Model	Actuator part no.
Basic	**VM830-01-00**	—
Roller lever	**VM830-01-01**	VM-01F
Adjustable roller lever	**VM830-01-13**	VM-13F
Adjustable rod lever	**VM830-01-14**	VM-14F

Actuator replacement is available.

How to Order

VM8 3 0 – 01 – 01

Port size

01	Rc 1/8
N01	NPT 1/8
F01	G 1/8

Actuator type

00	Basic
01	Roller lever
13	Adjustable roller lever
14	Adjustable rod lever

Number of ports

3	3 port

Application

● **Movement is changeable.**

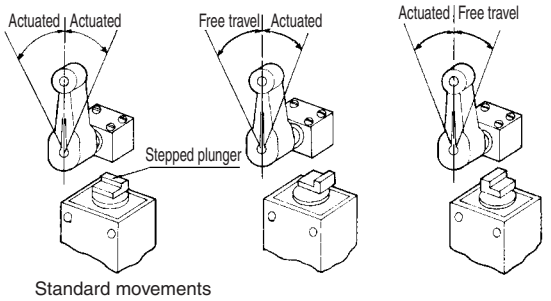

● **Roller can be mounted to inside of lever.**

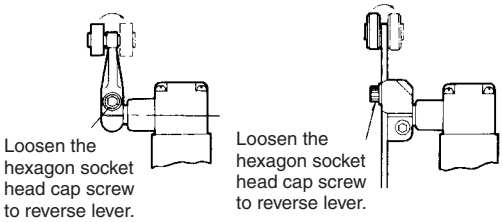

● **Lever location can be changed.**

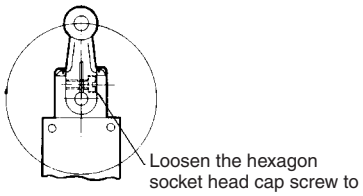

● **Head direction can be changed.**

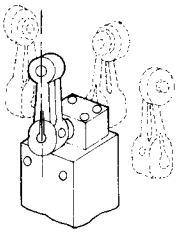

● **Lever length adjustment.**

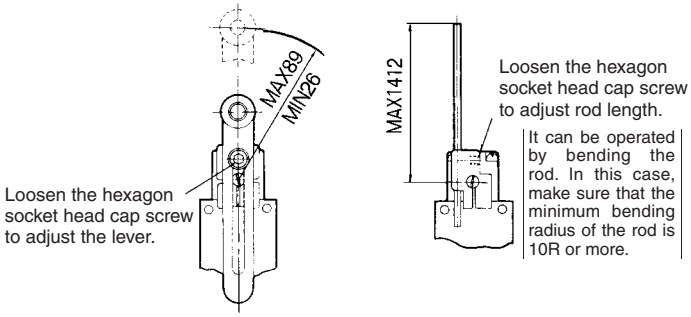

Construction

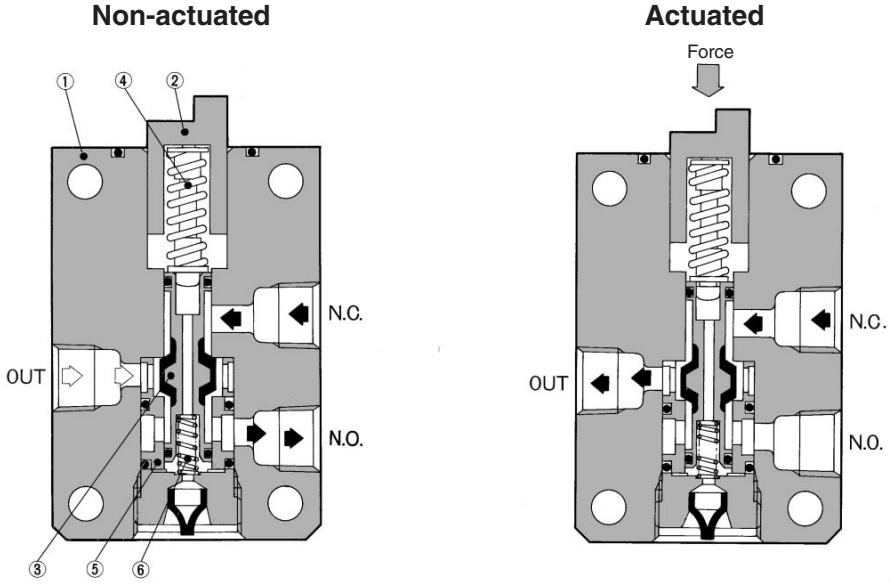

Component Parts

No.	Description	Material	Note
①	Body	ADC	Metallic plated
②	Plunger	POM	
③	Spool valve	Aluminum alloy, NBR	Rubber lined
④	Over travel spring	Stainless steel	
⑤	Retainer	Brass	
⑥	Spring	Steel	Zinc chromated

Series VM800

Basic

VM830-01-00

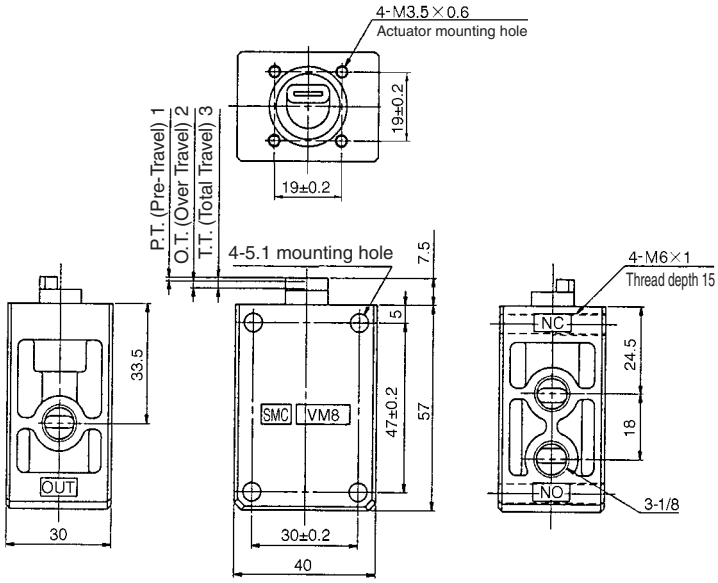

JIS Symbol

F.O.F.	23 N
P.T.	1.0 mm
O.T.	2.0 mm
T.T.	3.0 mm

Series VM800

Roller lever
VM830-01-01

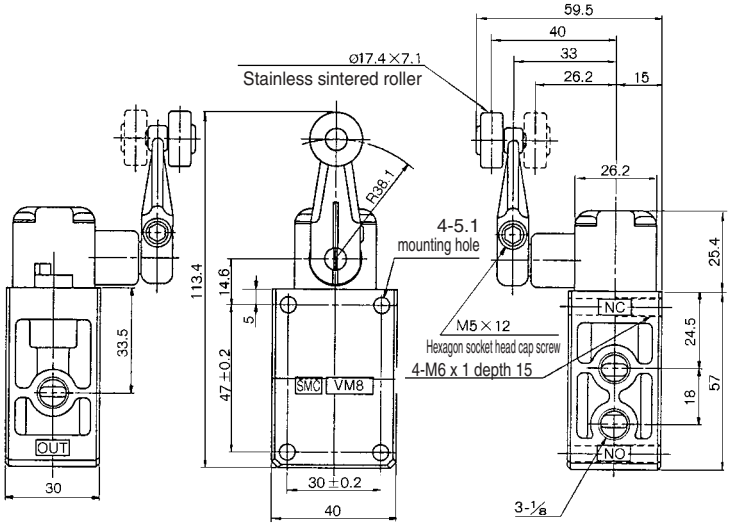

JIS Symbol

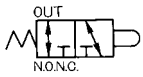

F.O.F.	20 N
P.T.	20°
O.T.	30°
T.T.	50°

Adjustable roller lever
VM830-01-13

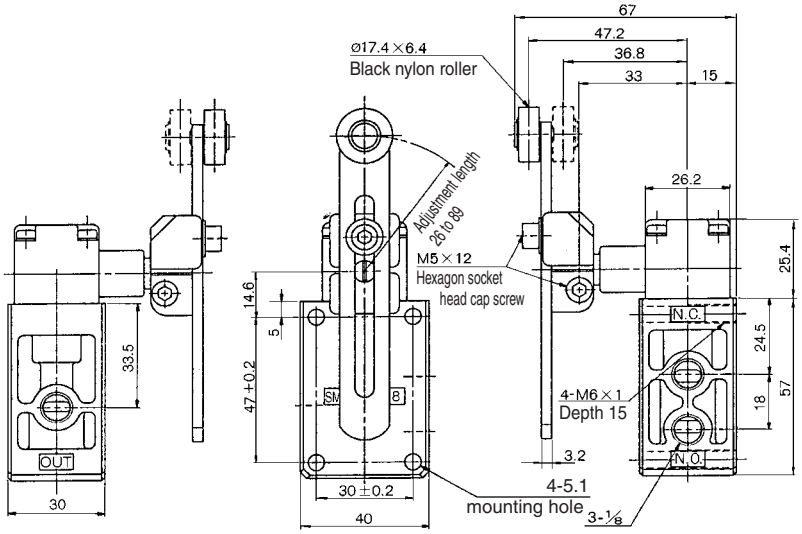

JIS Symbol

∗ At lever length 38.1 mm

F.O.F. ∗	20 N
P.T.	20°
O.T.	30°
T.T.	50°

Adjustable rod lever
VM830-01-14

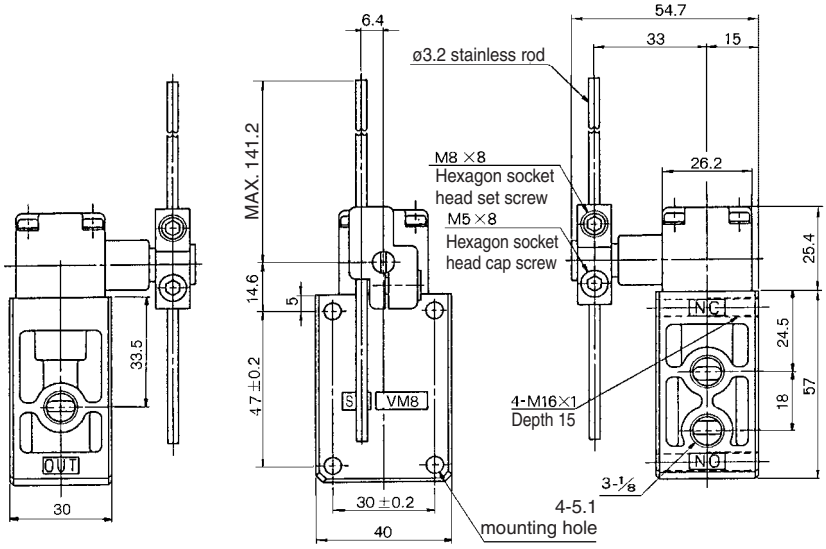

JIS Symbol

∗ At lever length 141.2 mm

F.O.F. ∗	2.3 N
P.T.	20°
O.T.	30°
T.T.	50°