THIS DRAWING IS UNPUBLISHED. RELEASED FOR PUBLICATION 20
© COPYRIGHT 20 BY TYCO ELECTRONICS CORPORATION, ALL RIGHTS RESERVED.

LOC	DIST
HM	00

REVISIONS

P	LTR	DESCRIPTION	DATE	DWN	APVD
	A	NSD06-089	17JUL2006	JM	GB
	B	REV; ECO-07-027584	07DEC2007	GG	GB

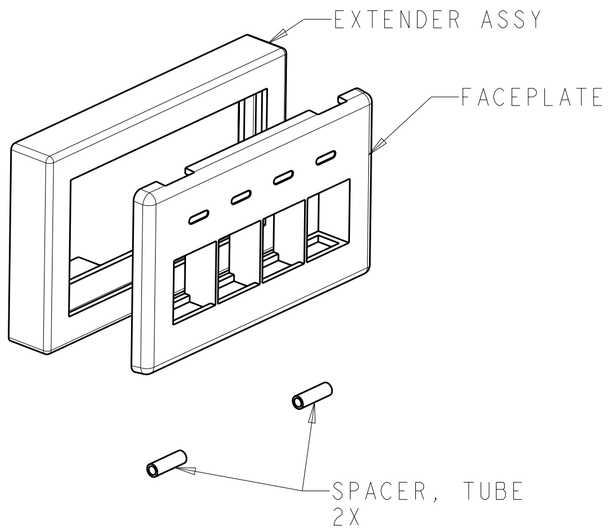

1. MATERIAL
   FACEPLATE: POLYCARBONATE MOLDING COMPOUND, BLACK
   SPACER TUBE: POLYOLEFIN, BLACK
2. DIMENSIONS ARE NOMINAL UNLESS NOTED.
3. THE FACEPLATE CAN BE INSTALLED INTO PANELS WHICH ARE 2.03 [.080] TO 1.14 [.045] THICK.
4. FACEPLATE WILL ACCEPT ANY COMBINATION OF FOUR UNSHIELDED SL SERIES JACKS OR INSERTS.
5. THIS KIT SHIPPED NOT ASSEMBLED.

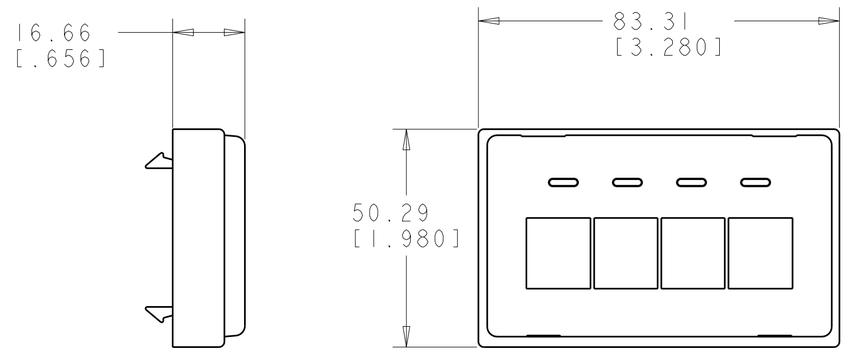

ASSEMBLED

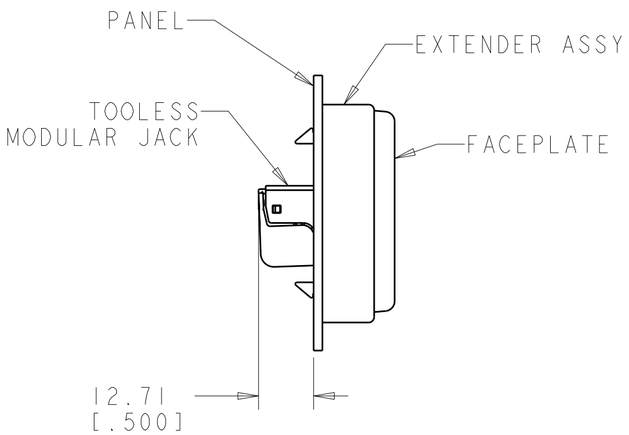

SUGGESTED MOUNTING

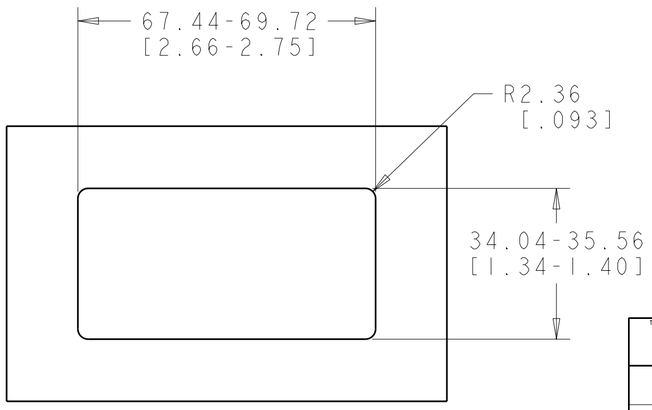

RECOMMENDED PANEL CUTOUT

BLACK	1933114-1
COLOR	PART NUMBER

THIS DRAWING IS A CONTROLLED DOCUMENT FOR TYCO ELECTRONICS CORPORATION. IT IS SUBJECT TO CHANGE AND THE CONTROLLING ENGINEERING ORGANIZATION SHOULD BE CONTACTED FOR THE LATEST REVISION.

DIMENSIONS: INCHES

TOLERANCES UNLESS OTHERWISE SPECIFIED:
0 PLC ±-
1 PLC ±-
2 PLC ±-
3 PLC ±-
4 PLC ±-
ANGLES ±-

MATERIAL 1 -
FINISH -

DWN J MCNEAL 17JUL2006
CHK G BOWMAN 17JUL2006
APVD G BOWMAN 17JUL2006
PRODUCT SPEC -
APPLICATION SPEC 408-3314
WEIGHT -

tyco Electronics
Tyco Electronics
Harrisburg, PA 17105-3608

NAME KIT, 4 PORT/EXTENDER, FLEXMODE
-
-

SIZE	CAGE CODE	DRAWING NO	RESTRICTED TO
A2	00779	C-1933114	-

CUSTOMER DRAWING | SCALE 1:1 | SHEET 1 OF 1 | REV B

AMP 1471-9 REV 31MAR2000

Pro/ENGINEER DRAWING