DRAWING MADE IN THIRD ANGLE PROJECTION

THIS DRAWING IS UNPUBLISHED. RELEASED FOR PUBLICATION ,19 .
© COPYRIGHT 19 BY AMP INCORPORATED. ALL INTERNATIONAL RIGHTS RESERVED.

LOC	DIST	P	F	ZONE	LTR	DESCRIPTION	DATE	APPD
G	14				G	REVISED PER 0720-0033-94	3/8/94	DAP

REVISIONS

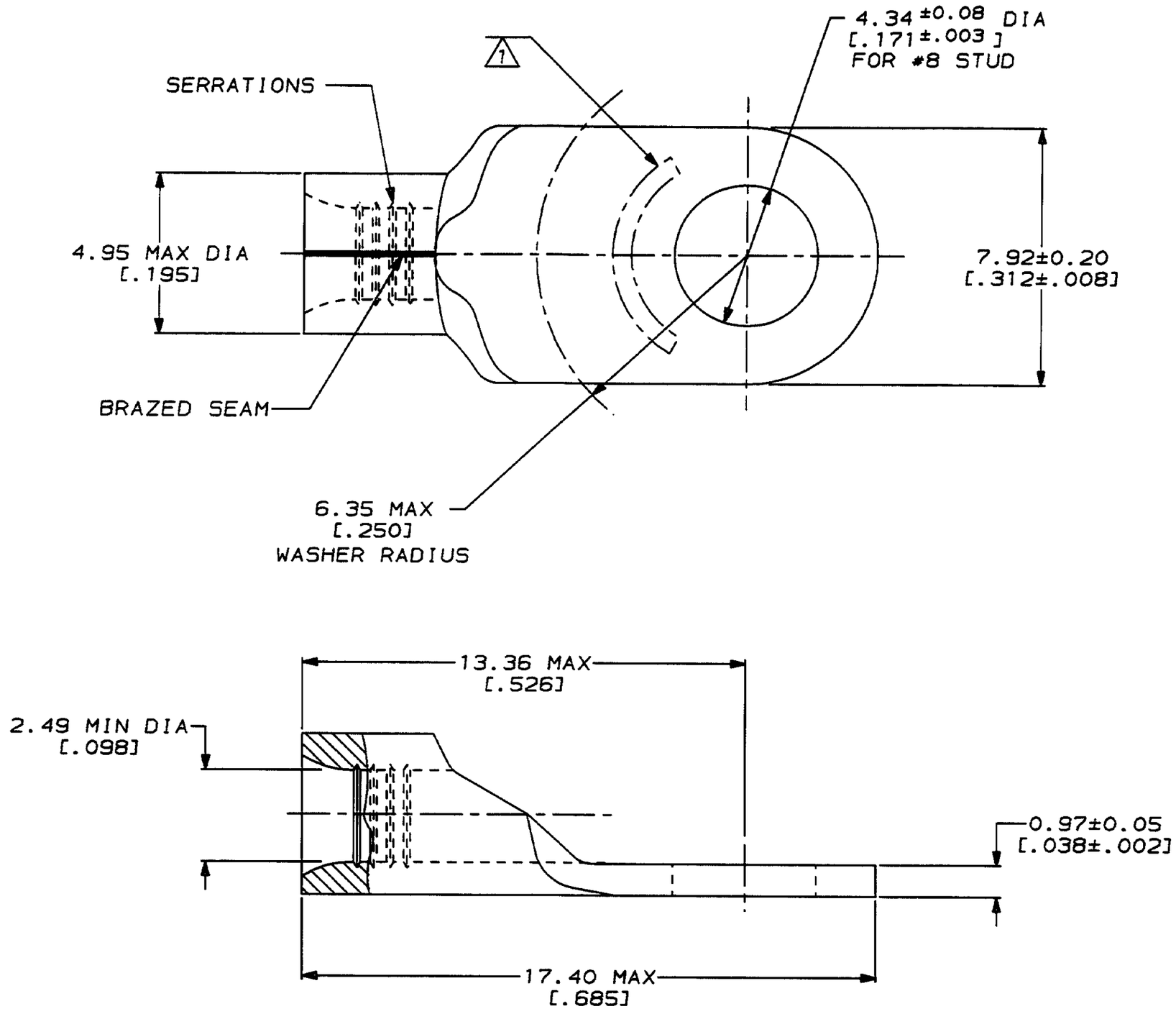

METRIC

DIMENSIONS LISTED IN mm [INCHES]

AMP WIRE RANGE	E13288 Listed
14-12 AWG SOLID OR STRANDED	14-12 AWG STRANDED
LR7189 Certified	MILITARY P/N AND CLASS
14-12 AWG SOLID OR STRANDED	NOT APPLICABLE

1 STAMP AMP 14-12* APPROX AS SHOWN

321827

OBSOLETE	QUANTITY	PACKAGING TYPE	PART NO
	~~2500~~	~~ON TAPE~~	~~1-321827-0~~
	----	LOOSE PIECE	321827

AMP INCORPORATED
CUSTOMER SERVICE SYSTEMS

FOR ADDITIONAL PRODUCT INFORMATION OR COPIES OF DRAWINGS AND TECHNICAL DOCUMENTS	PRODUCT INFORMATION CENTER 1-800-522-6752
FOR APPLICATION TOOLING INFORMATION	TOOLING ASSISTANCE CENTER 1-800-722-1111
FOR ORDER ENTRY	1-800-526-5142

MAX RECOMMENDED OPERATING TEMPERATURE: 170°C MAX

VOLTAGE RATING: NOT APPLICABLE

WIRE CROSS SECTIONAL AREA RANGE: 1.65-4.17mm² [3,260-8,230] CIR MILS SOLID OR STRANDED

THIS DRAWING IS A CONTROLLED DOCUMENT FOR AMP INCORPORATED. IT IS SUBJECT TO CHANGE AND THE CONTROLLING ENGINEERING ORGANIZATION SHOULD BE CONTACTED FOR THE LATEST REVISION.

DO NOT SCALE PRINT.
UNLESS SPECIFIED
~~DIMENSIONS IN mm [INCHES]~~
TOLERANCES ON :
2 PLC DEC ± -
3 PLC DEC ± -
ANGLES ± -

MATERIAL: COPPER PER ASTM B-152 ANNEALED

FINISH: TIN PLATE 0.00254[.000100] MIN THK PER MIL-T-10727

DR 3/8/94 DK SCHRUM
CHK 3/9/94 DA PATTERSON
APPD 3/9/94 CH KULYNYCH
APPD 3/9/94 JL MECKLEY
PRODUCT SPEC -
APPLICATION SPEC -
WEIGHT -

AMP Incorporated
Harrisburg, PA 17105-3608

NAME: TERMINAL, RING TONGUE, SOLISTRAND™

SIZE	CAGE CODE	DRAWING NO
C	00779	C-321827
SCALE 8:1		SHEET 1 OF 1

CUSTOMER DRAWING

AMP 1471-5 REV 3-92

08-MAR-94 16:41:46 amp26463 /files/dept1123/dwg1123/u.solistrand/u.inline