Feb.1.2018 Copyright 2018 HIROSE ELECTRIC CO., LTD. All Rights Reserved.

	COUNT	DESCRIPTION OF REVISIONS	BY	CHKD	DATE		COUNT	DESCRIPTION OF REVISIONS	BY	CHKD	DATE
△					. .	△					. .
△					. .	△					. .
△					. .	△					. .

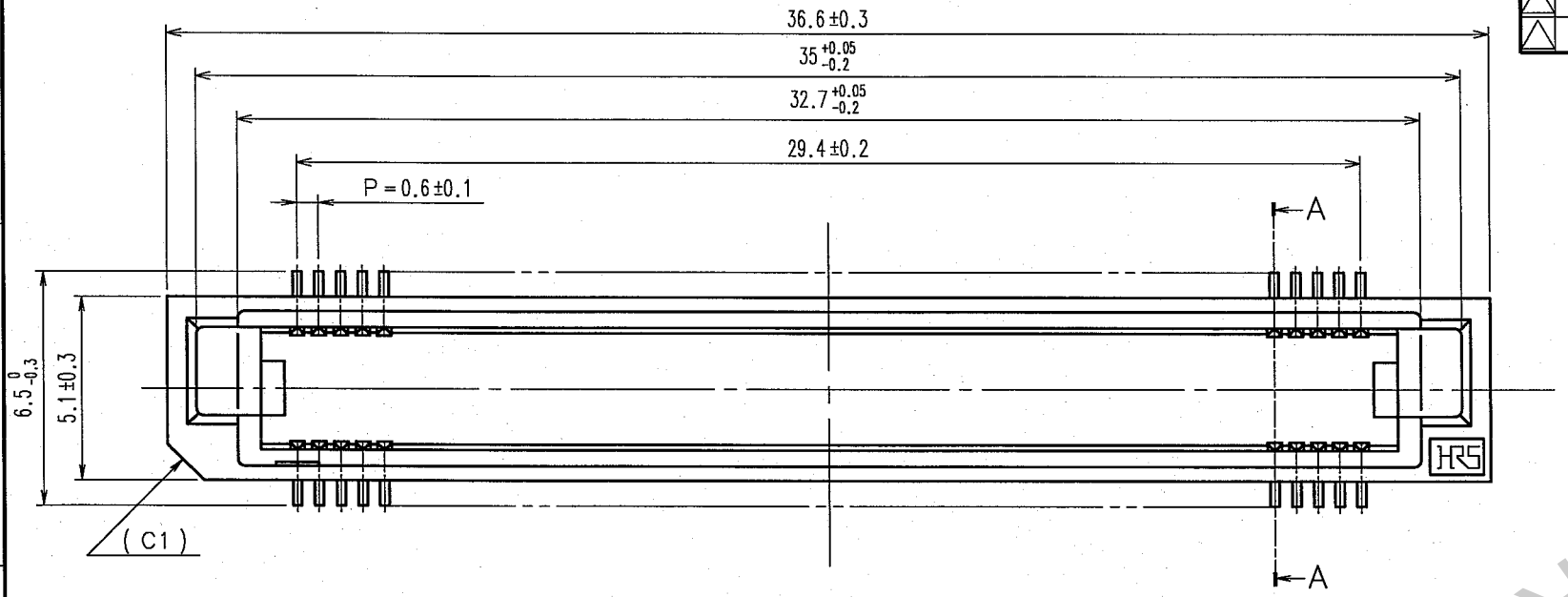

RECOMMENDED LAND PATTERN DIMENSION OF PCB (MOUNTING SIDE) (2:1)

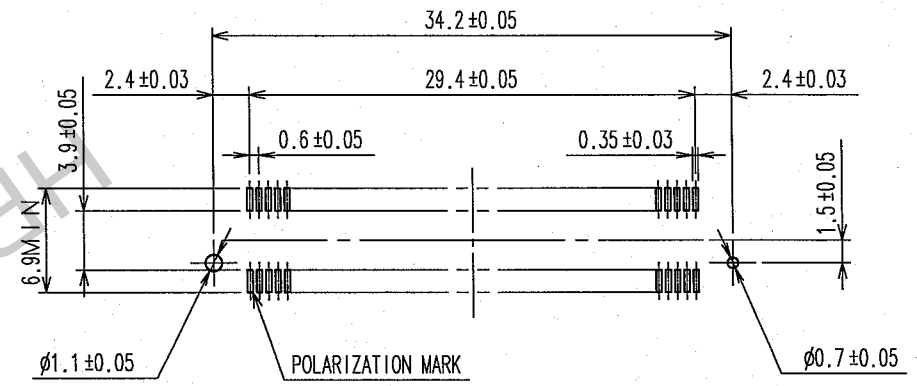

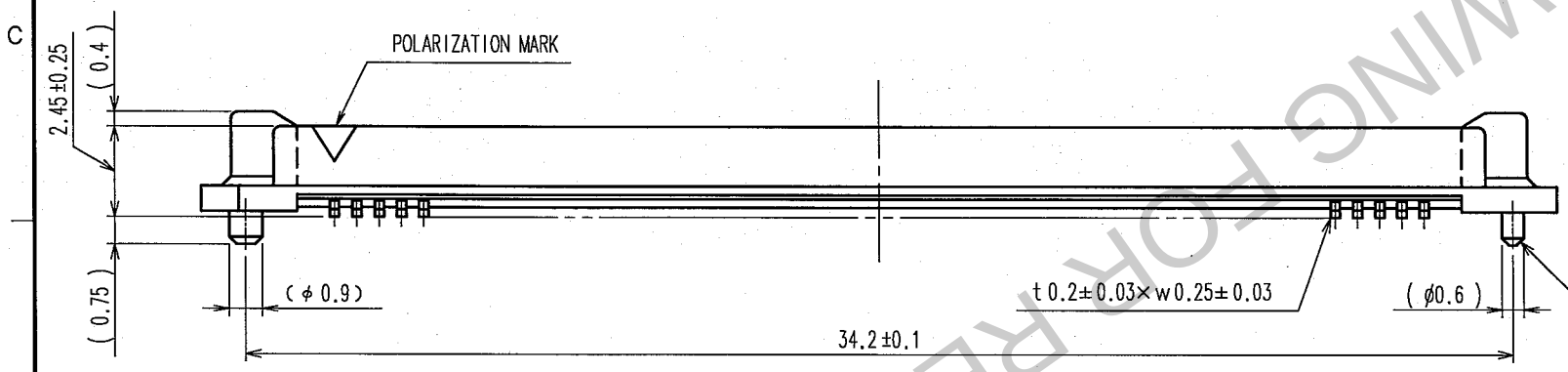

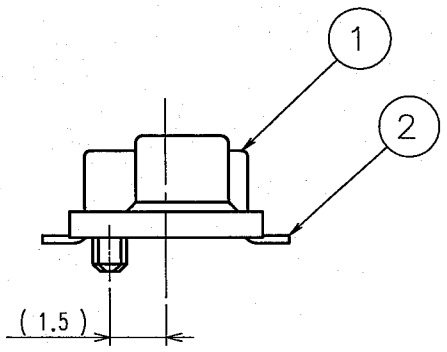

A−A

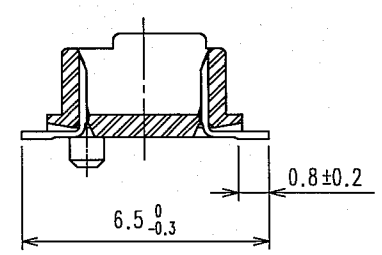

NOTE 1. LEAD CO-PLANARITY SHALL BE 0.1mm MAX.
2. EMBOSSED CARRIER TAPE PACKAGING SHALL BE APPLIED FOR THIS PRODUCT. SEE SHEET 2/2 FOR DETAILS.
3. THIS PRODUCT HAS TAPE FOR VACUUM PICKUP.SEE NEXT PAGE FOR DETAIL OF STICKING POSITION,ETC
4. FOR MODIFICATION,ETC.,PREVENTIVE HOLE FOR SINK MARK MAY BE ADDED ACCORDING TO CIRCUMSTANCES.
5. THE DIMENSIONS IN PARENTHESES ARE FOR REFERENCE.

NO.	MATERIAL	FINISH, REMARKS	NO.	MATERIAL	FINISH, REMARKS
1	POLYPHENYLENE SULFIDE	LIGHT BROWN (UL94V-0)	2	PHOSPHOR BRONZE	CONTACT AREA:GOLD 0.1μm min. LEAD AREA:GOLD FLASH UNDER PLATING:NICKEL 0.5μm min.

CODE NO.(OLD)	DRAWN	DESIGNED	CHECKED	APPROVED	RELEASED
CL	K.Doi '05.09.02	K.Doi '05.09.02	K.Ogawa '05.09.02	H.Okawa 05.09.02	. .

SCALE 5 : 1	DRAWING NO. EDC3-150566-23	PART NO. FX8-100P-SV(93)
UNITS mm	HRS HIROSE ELECTRIC CO., LTD	CODE NO. CL578-0005-7-93 1/2

TO
PCK

HRS DRAWING FOR REFERENCE

Feb.1.2018 Copyright 2018 HIROSE ELECTRIC CO., LTD. All Rights Reserved.

	COUNT	DESCRIPTION OF REVISIONS	BY	CHKD	DATE		COUNT	DESCRIPTION OF REVISIONS	BY	CHKD	DATE
△					. .	△					. .
△					. .	△					. .
△					. .	△					. .

UNREELING DIRECTION

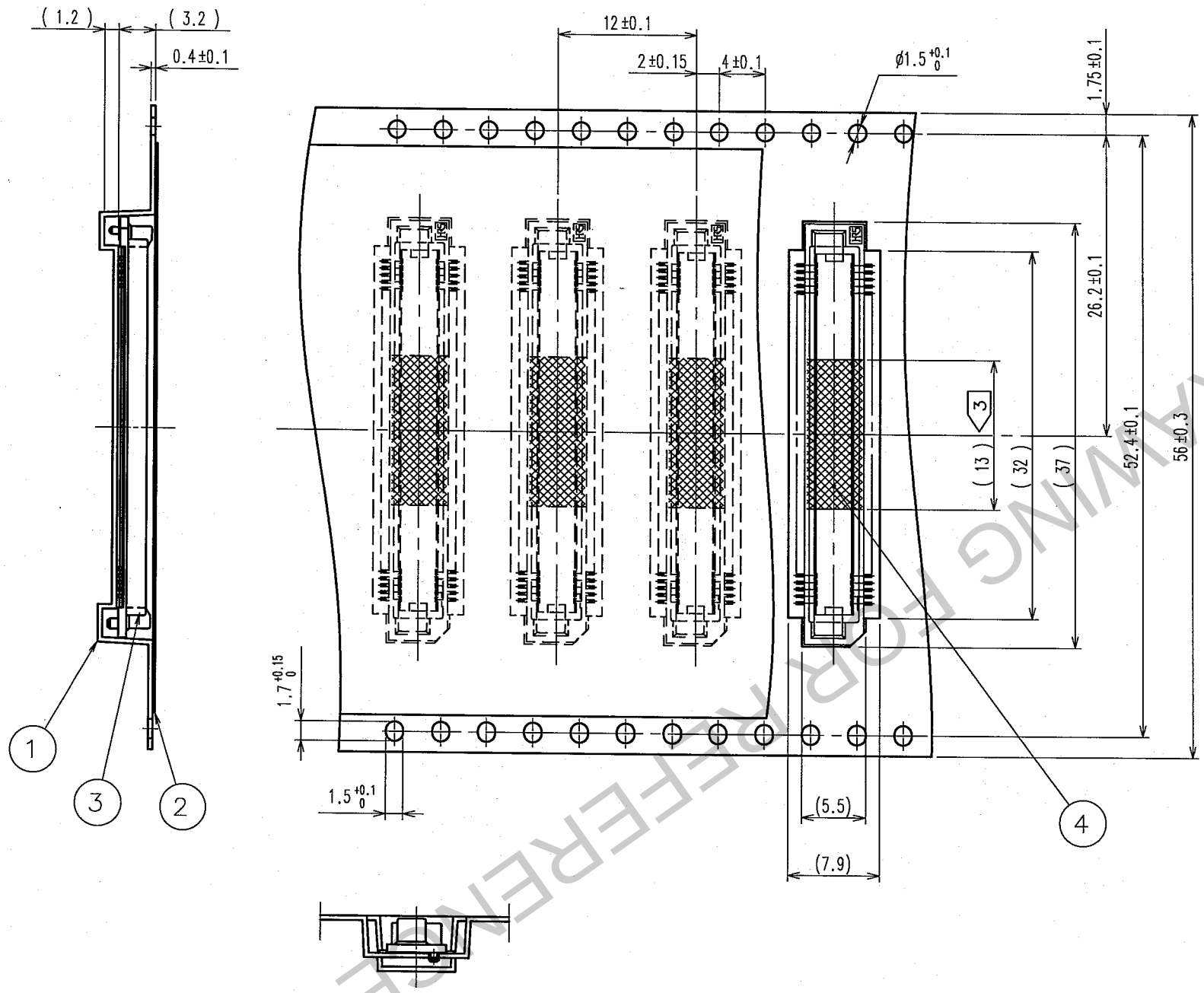

REELED DIMENSION (FREE)

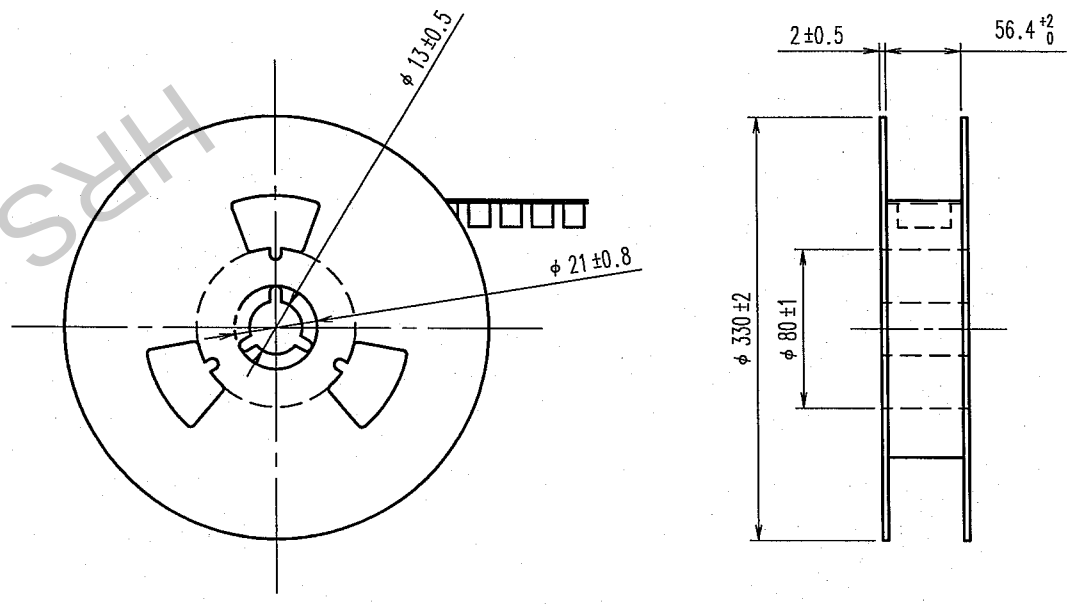

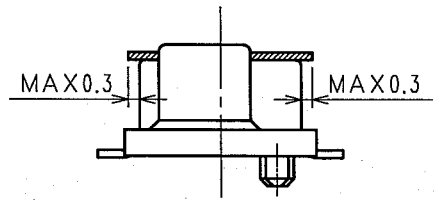

DETAIL FOR TAPE VACUUM PICKUP(5:1)

NOTE 1. 1REEL:1000 CONNECTORS
2. THE DIMENSIONS IN PARENTHESES ARE FOR REFERENCE.
3 REMOVE THE VACUUM PICK-UP TAPE AFTER MOUNTING THE CONNECTOR.

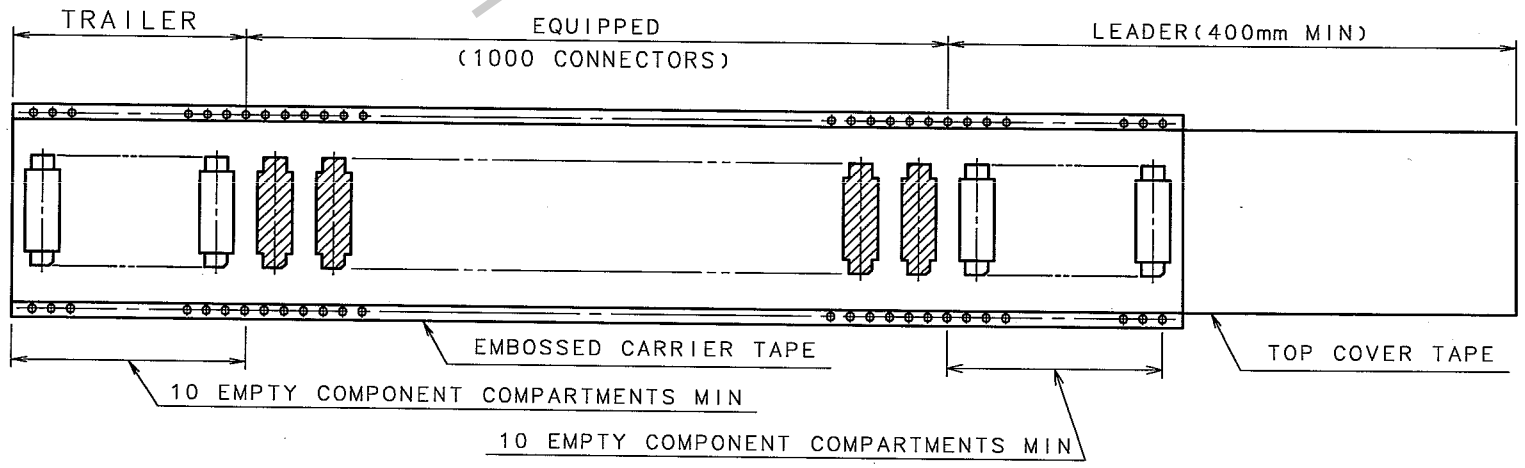

NO.	MATERIAL	FINISH, REMARKS	NO.	MATERIAL	FINISH, REMARKS
2	POLYESTER	TOP COVER TAPE	4	POLYMIEDE	(TAPE FOR VACUUM PICKUP)
1	POLYSTYRENE	EMBOSSED CARRIER TAPE	3	(CONNECTOR)	

CODE NO.(OLD)	DRAWN	DESIGNED	CHECKED	APPROVED	RELEASED
CL	K.Doi 05.09.02	K.Doi 05.09.02	H.Ogawa 05.09.02	H.Okawa 05.09.02	. .

SCALE 2 : 1	DRAWING NO. EDC3-150566-23	PART NO. FX8-100P-SV(93)
UNITS mm	HRS HIROSE ELECTRIC CO.,LTD.	CODE NO. CL578-0005-7-93 2/

TO
PCK

HRS DRAWING FOR REFERENCE