REVISIONS				
REV.	ECN	DESCRIPTION	DATE	APPROVED
F		MATING END POSITION ADDED	APR 29/08	ZLJ
G		PIN LABELS ADDED	APR 06/10	ZLJ
H		CORRECTION TO HOUSING CONFIGURATION DISPLAYED	JUN 28/10	ZLJ

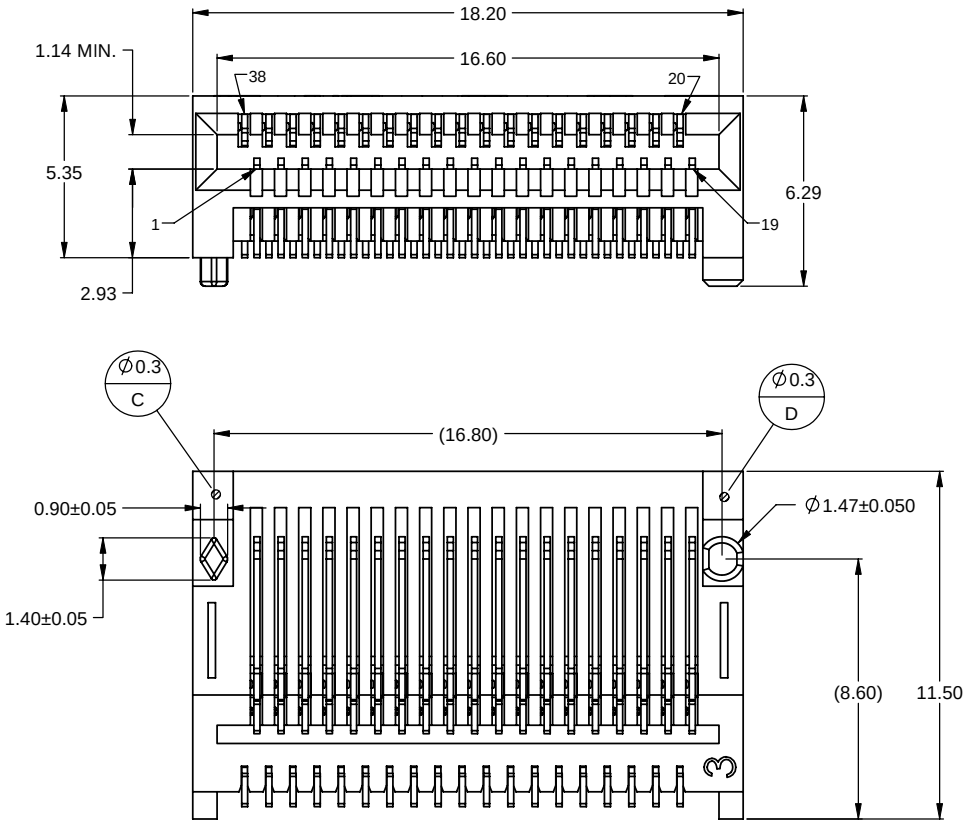

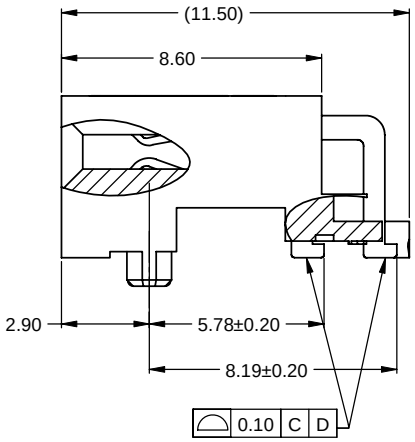

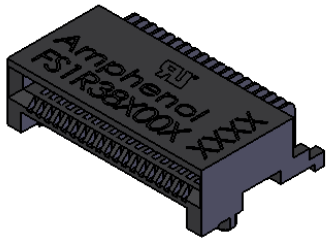

PART NUMBER	PACKAGING	CONTACT PLATING
FS1-R38-2000	TAPE AND REEL	30µ" GOLD OVER 50µ" NICKEL IN CONTACT AREAS 100µ" MATTE TIN OVER 50µ" NICKEL IN SOLDER AREAS
FS1-R38-3000		15µ" GOLD OVER 50µ" NICKEL IN CONTACT AREAS 100µ" MATTE TIN OVER 50µ" NICKEL IN SOLDER AREAS

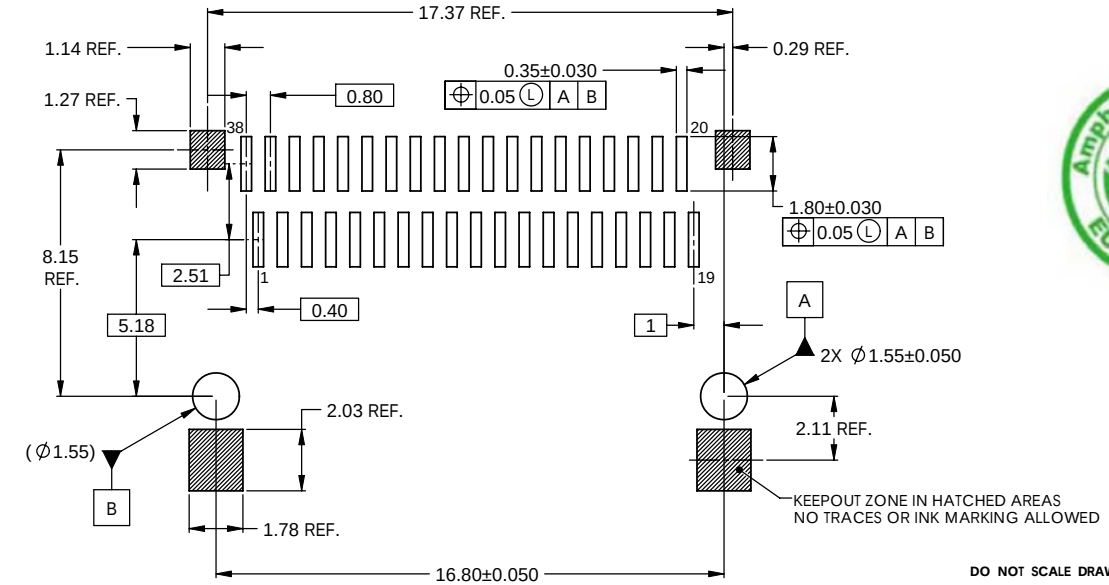

RECOMMENDED PCB LAYOUT

NOTES:

1) MATERIAL:

HOUSING: SOLDER REFLOW PROCESS COMPATIBLE LCP, UL94V-0

CONTACTS: PHOSPHOR BRONZE

2) ROHS COMPLIANT

3) PERFORMANCE:

ELECTRICAL: 0.5 AMPS MAX. PER CONTACT

MECHANICAL: 250 MATING CYCLES MINIMUM

4) COMPLIES WITH SFF 8436.

DO NOT SCALE DRAWING

THIS DOCUMENT CONTAINS PROPRIETARY INFORMATION AND SUCH INFORMATION MAY NOT BE DISCLOSED TO OTHERS FOR ANY PURPOSE OR USED FOR MANUFACTURING PURPOSES WITHOUT PERMISSION FROM AMPHENOL CANADA CORP.

UNLESS OTHERWISE SPECIFIED DIMENSIONS ARE IN MILLIMETERS. TOLERANCES ARE:
DECIMALS .X± 0.25 .XX± 0.13 ANGLES ± 2°
MATERIAL AND FINISH

APPROVALS	DATE
DRAWN YK	21/APR/06
DESIGNED YK	21/APR/06
CHECKED	
QA APP'D	
E APP'D	
DWG APP'D	

ENG.REL.NO. EAR 12923
CODE IDENT. NO. 03554

Amphenol Canada Corp.

TITLE 38 POSITION RIGHT ANGLE HIGH SPEED CONNECTOR

SIZE C DWG. NO. P-FS1-R38-X000 REV. H
SCALE NTS PROJECT FS1 SHEET 1 OF 1