Order-No.	Shell Size / for No. of Contacts	A ±0.3	B ±0.1	C ±0.3	D ±0.3	E ±0.3	øF min - max	G ±0.3	H ±0.3	J ±0.3	K ±0.3	L ±0.3	M ±0.3	N ±0.5	P ±0.3	Q	
FKC1A	1 / 9	10	25	31.8	39.3	15.8	3.5 - 8.6	20	41.6	11.6	17	19	19.3	20.2	12	3.9	
FKC2A	2 / 15	16	33.3	41.2	45	16.2	3.5 - 8.6	28.4	47.8	11.6	24.8	26.9	27.9	25.7	12	3.9	①
FKC3A	3 / 25	28	47	54.9	52	16.2	4 - 12	42.1	54.8	11.6	38.2	40.5	41.4	25.3	18	3.9	①
FKC4A	4 / 37	44.4	63.5	71.4	55	18.9	6 - 13	58.6	57.8	12.1	55	57.2	58.1	22.5	21	3.9	①
FKC5A	5 / 50	42	61.1	69	55	19.5	6 - 14	56.2	57.8	15	52.6	54.7	55.7	22.5	21	4.1	
						②								①		①	

øF = Cable diameter

view of the hoods without lid

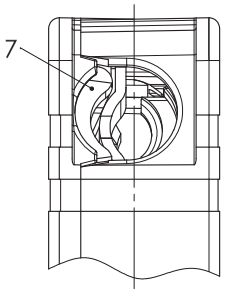

Cable reduction plate (Part-No. 7) only in sizes 1 and 2

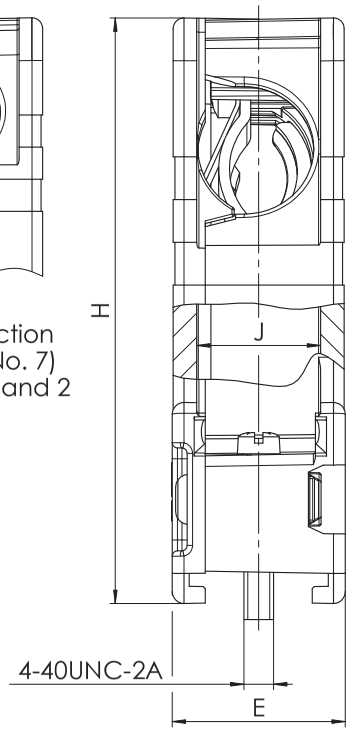

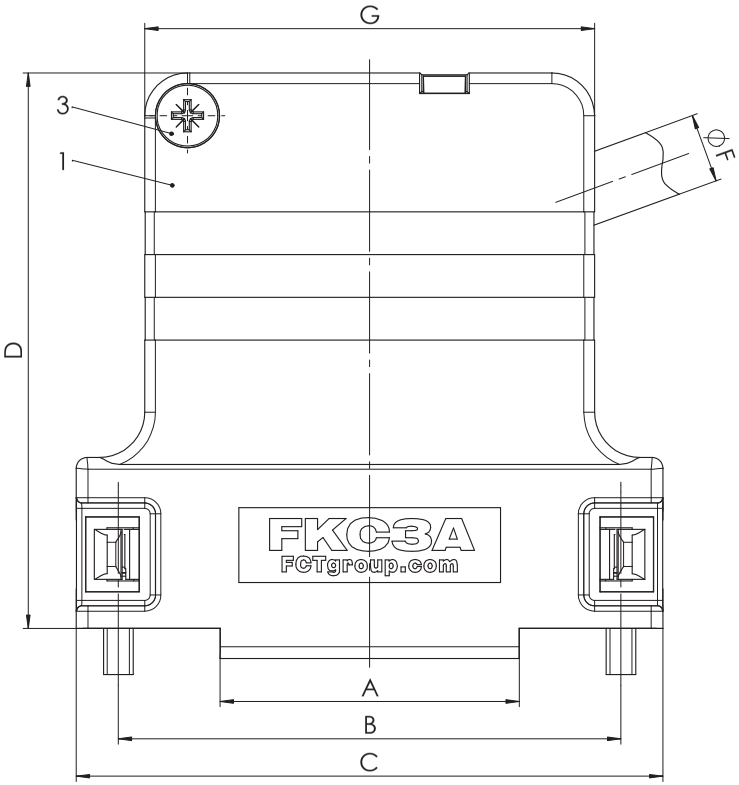

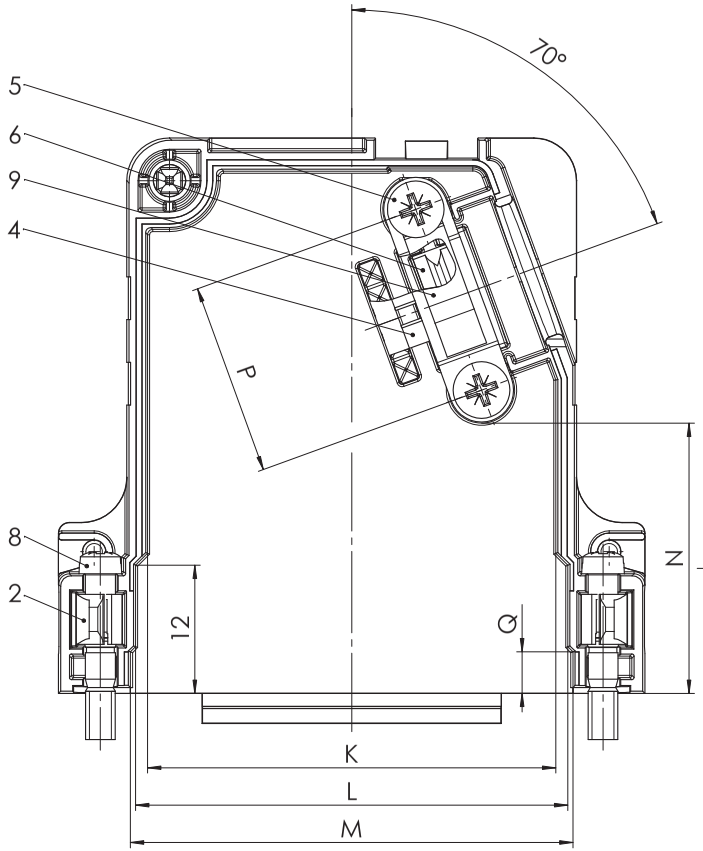

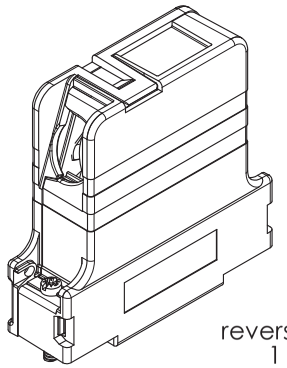

reverse side
1 : 1

RoHS compliant

① max. torque are 40 Ncm
Hood is snapped together
Part-No. 3, 4, 5, 6 and 9 not mounted
FKC3-5A without Part-No. 7
FKC1-3A with 1 Shell screw (Part-No. 3)
FKC4-5A with 2 Shell screws (Part-No. 3)

No.	St.	Part	Type Description/Material	Surface plating/Colour/Class
9	1	Contact spring	Spring steel	blank
8	2	Locking screw	FVS1/5-K1163 4-40 / Steel	nickel plated
7	0/1	Cable reduction plate	ABS	nickel plated
6	1	Strain relief	ABS	nickel plated
5	2	Cable clamp screw	Steel	zinc plated
4	1	Cable clamp	Steel	tin plated
3	1/2	Shell screw	Steel	zinc plated
2	2	Catch spring	PEI	black
1	1	Hood	FKC1-5A / ABS / PC+ABS	nickel plated

Measurement without tolerance acc. to ISO 2768-m

SCALE 2:1

TITLE: Plastic Hood

	NAME / DATE
DRAWN	BWittek 09-05-2008
CHECKED	Gabriele.Wagner 02-07-2008

FCT a molex company

DWG.NO. FKC1-5A

REV. 2

REV.	DATE	CH.-NO.
2	02-07-2008	22263
1	08-05-2008	22225

ORIGINAL: DIN A3-DRAWING AS A FILE

REPLACEMENT FOR: FKC1-2Ae,FKC3Aa,FKC4A-5Aa_ACAD

PAGES 1

COMMENT:
ALL RIGHTS ARE RESERVED BY US FOR THIS DRAWING, WITHOUT OUR PRIOR CONSENT,
IT MAY NEITHER BE DUBLICATED NOR MADE AVAILABLE TO A THIRD PARTY,
AND IT ALSO MAY NOT BE IMPROPERLY USED BY TE RECEIVER, OR A THIRD PARTY.