THIS DRAWING IS UNPUBLISHED. RELEASED FOR PUBLICATION 20
© COPYRIGHT 20 BY - TE Connectivity ALL RIGHTS RESERVED.

REVISIONS

P	LTR	DESCRIPTION	DATE	DWN	APVD
	B1	REVISED (ECR-16-015632)	04.NOV.'16	SJ	JW

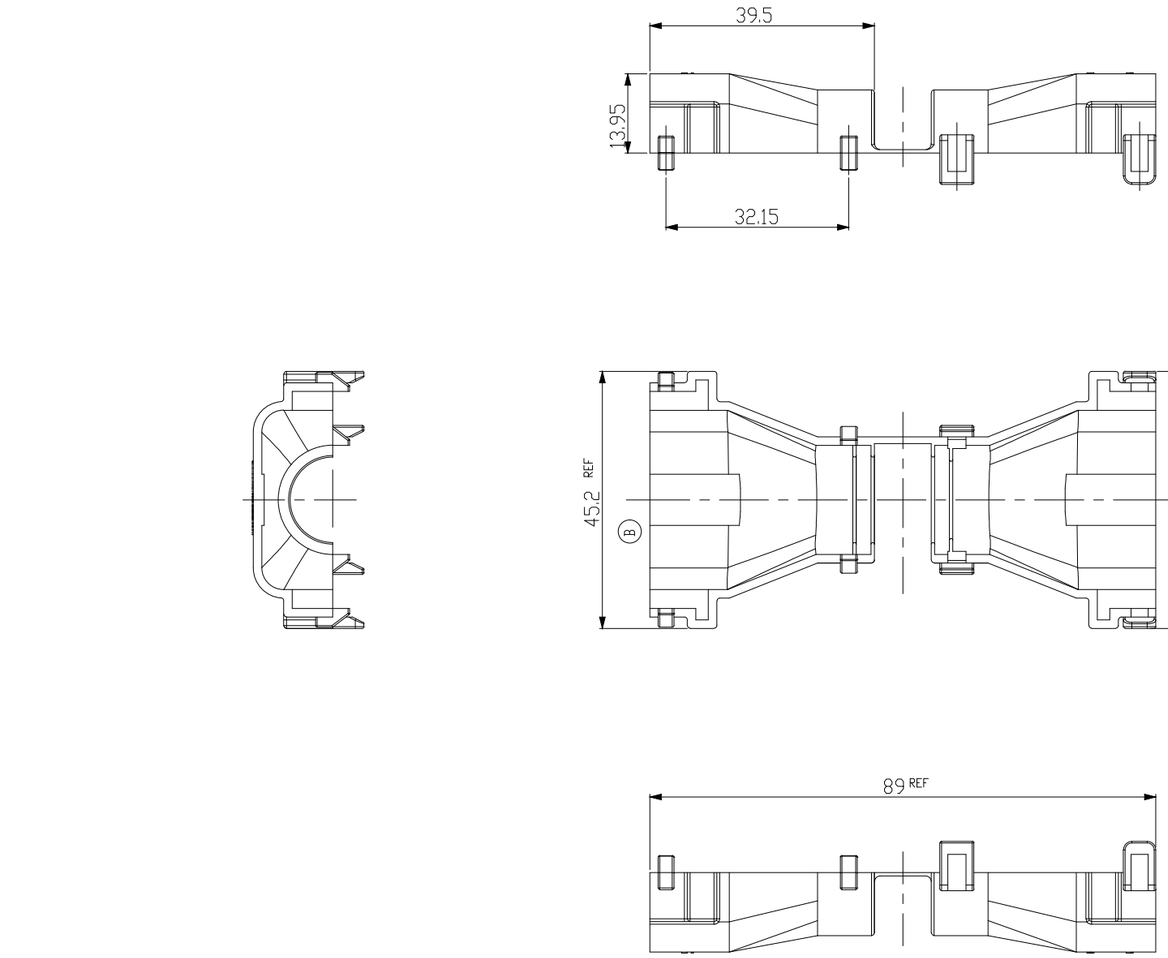

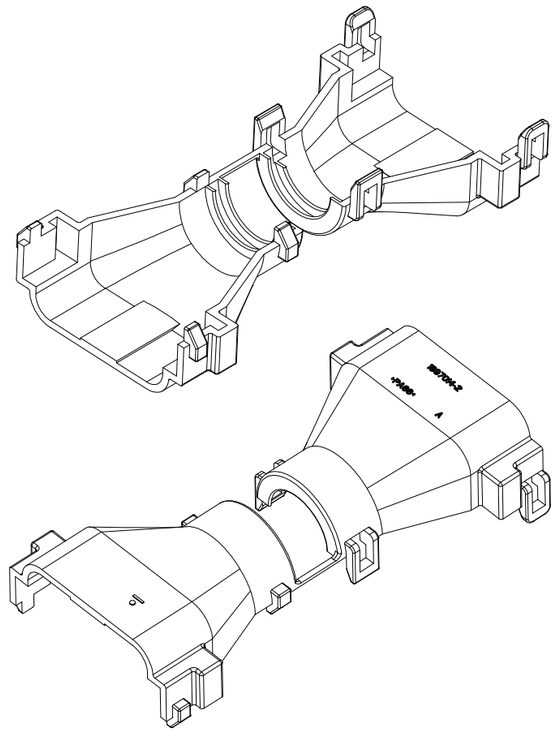

NOTE
1. GENERAL TOLERANCE: ±0.3
2. APPLICABLE CONNECTOR:X-1897009-X
3. APPLICABLE CORRUGATE TUBE: Ø14mm
4. APPLICATION TEST SPEC:MS210-06C(EXCEPT 4.4)

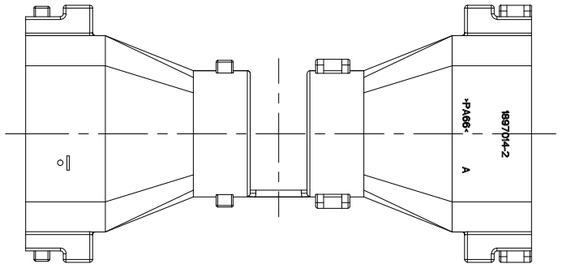

COLOR	MATERIAL	P/N
BLACK	PA66	1897014-2

THIS DRAWING IS A CONTROLLED DOCUMENT.

DIMENSIONS: mm

TOLERANCES UNLESS OTHERWISE SPECIFIED
0 PLC ±
1 PLC ±
2 PLC ±
3 PLC ±
4 PLC ±
ANGLES ±

MATERIAL: SEE TABLE

FINISH

DWN: SJ CHOI
CHK: SJ CHOI
APVD: JW JUNG
PRODUCT SPEC
APPLICATION SPEC
WEIGHT

TE Connectivity

NAME: PLUG WIRE COVER FOR MTII/JPT SEALED 26P PLUG ASS'Y

SIZE	CAGE CODE	DRAWING NO	RESTRICTED TO
A3	00779	C-1897014	–

CUSTOMER DRAWING | SCALE 1:1 | SHEET 1 OF 1 | REV B1

1470-19 (3/13)