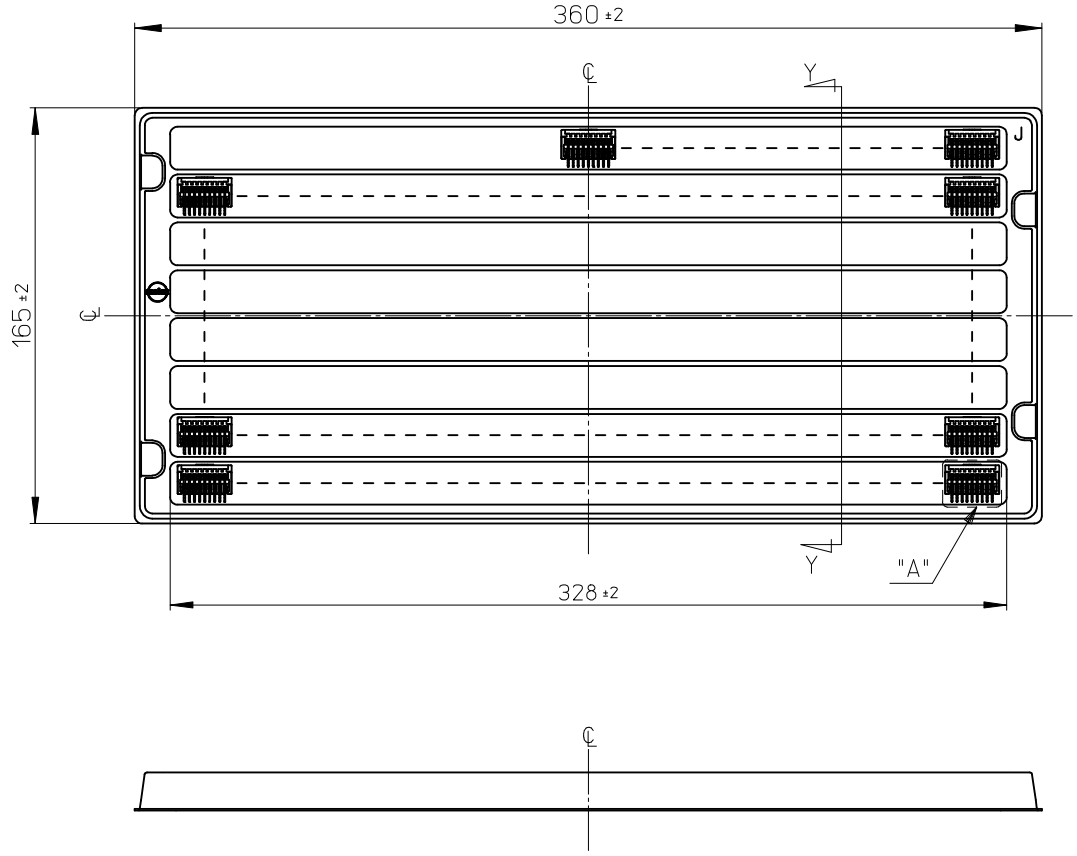

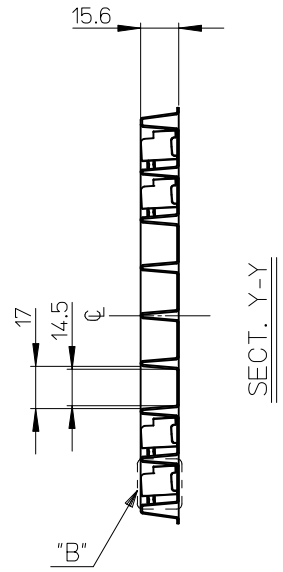

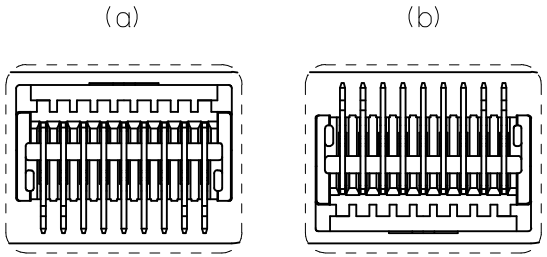

3 DETAIL A
(SCALE 2:1)

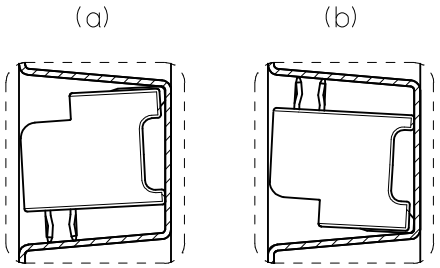

3 DETAIL B
(SCALE 2:1)

注記

1. 一般公差：±0.5
   GENERAL TOLERANCES:±0.5
2. 各部の反りは2.0MAX.
   WARP:2.0MAX.
3. トレイの中の製品の向きは（a）又は（b）とし、かつ同一トレイ中の製品の向きはどちらか一方で統一
   PRODUCT DIRECTION SHOULD BE (a) OR (b).
   ALL PRODUCTS MUST FACED THE SAME DIRECTION IN THE TRAY.

適用製品番号 APPLICABLE PART No.
55959-**7*
55959-**3*

RELEASED	EC NO: J2009-0955	2008/10/20
	DRWN:Y.TOKUZONO	2008/10/20
	CH'KD:T.HARUYAMA	2008/10/20
	APPR:N.UKITA	2008/10/20
REV: 0	DESCRIPTION	

GENERAL TOLERANCES (UNLESS SPECIFIED)

10 UNDER	±---
10 OVER 30 UNDER	±---
30 OVER	±---
ANGULAR ±--- °	

DRAFT WHERE APPLICABLE MUST REMAIN WITHIN DIMENSIONS

DIMENSION STYLE: MM ONLY	SCALE: 1:2	DESIGN UNITS: METRIC	THIRD ANGLE PROJECTION
DRAWN BY: Y.TOKUZONO	DATE: 2008/10/17	TITLE: TRAY FOR 55959 (2.0MM W-T-B DUAL CONN. DIP PLUG HOUSING ASS'Y)	
CHECKED BY: T.HARUYAMA	DATE: 2008/10/17		
APPROVED BY: N.UKITA	DATE: 2008/10/17	molex MOLEX INCORPORATED	
MATERIAL NO.: 098910030		DOCUMENT NO.: SD-55959-001	SHEET NO.: 1 OF 1
SIZE: A3	THIS DRAWING CONTAINS INFORMATION THAT IS PROPRIETARY TO MOLEX INCORPORATED AND SHOULD NOT BE USED WITHOUT WRITTEN PERMISSION		

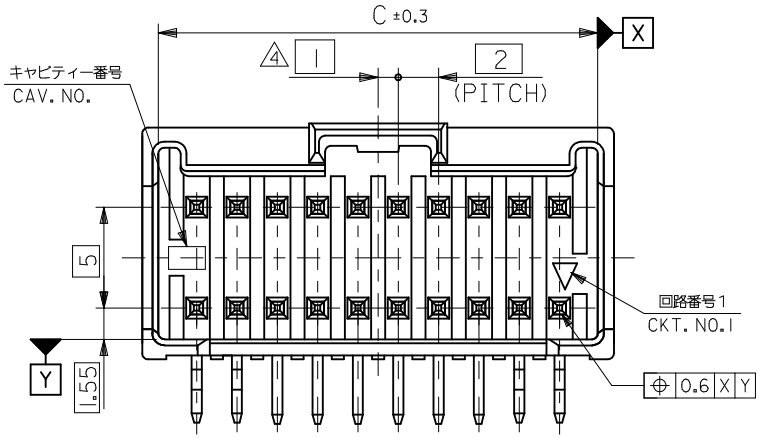

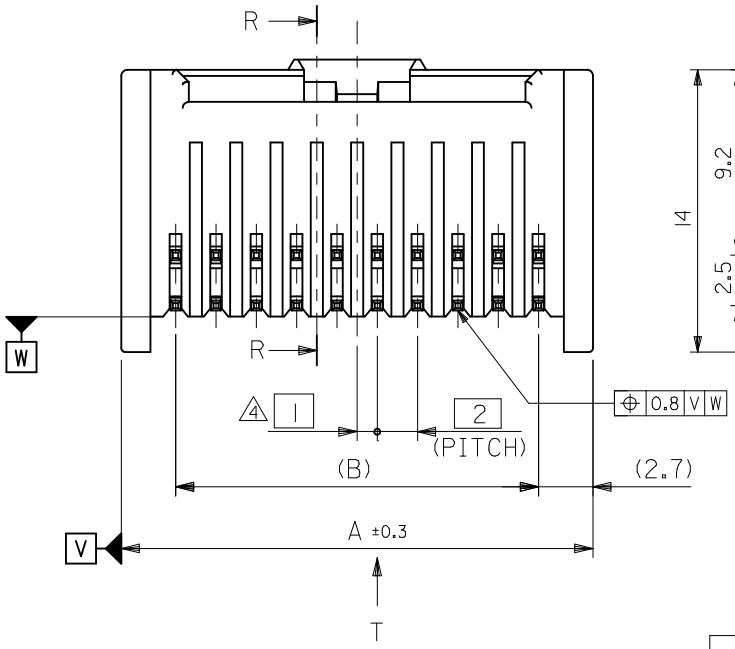

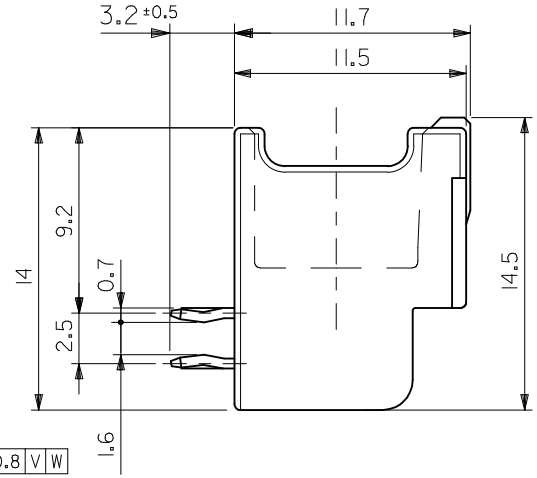

注記
NOTES

1. 材料 MATERIAL
   ピン : 黄銅, 錫メッキ
   PIN : BRASS, TIN PLATING
   ハウジング : PBT (ガラス入り:15%), UL94V-0
   HOUSING : PBT(G.F.:15%), UL94V-0
2. 嵌合相手 :51353シリーズ
   MATE WITH :51353 SERIES
3. ソルダーテールキンクは、両端の8ピンのみとする。
   KINK TO BE APPLIED FOR 8 PINS AT BOTH ENDS.

4 (全極数/2)=偶数の場合に適用。
APPLY FOR (CIRCUIT/2)=EVEN

5 製品番号
MATERIAL NO.
55959-**3*
極数 CIRCUIT SIZE
色 COLOR

6. ELV 及びRoHS適合品
   ELV AND RoHS COMPLIANT

ナチュラル(白) NATURAL(WHITE)	0
黒 BLACK	1
赤 RED	2
黄 YELLOW	3
青 BLUE	4
桃 PINK	5
緑 GREEN	6
茶 BROWN	7
橙 ORANGE	8
紫 VIOLET	9

41.8	38	43.4	55959-403*	40
39.8	36	41.4	-383*	38
37.8	34	39.4	-363*	36
35.8	32	37.4	-343*	34
33.8	30	35.4	-323*	32
31.8	28	33.4	-303*	30
29.8	26	31.4	-283*	28
27.8	24	29.4	-263*	26
25.8	22	27.4	-243*	24
23.8	20	25.4	-223*	22
21.8	18	23.4	-203*	20
19.8	16	21.4	-183*	18
17.8	14	19.4	-163*	16
15.8	12	17.4	-143*	14
13.8	10	15.4	-123*	12
11.8	8	13.4	-103*	10
9.8	6	11.4	55959-083*	8
55959-**3* CONNECTOR SERIES NO.	C	B	A	5 MATERIAL NO. ORDER NO. / CKT.

REVISED
EC NO: J2014-1085 2014/01/09
DRWN:TYAJIMA01 2014/01/09
CH'KD:
APPR:NUKITA
DESCRIPTION
G
REV

GENERAL TOLERANCES (UNLESS SPECIFIED)

10 UNDER	±0.2
10 OVER 30 UNDER	±0.25
30 OVER	±0.3
ANGULAR ±3 °	

DRAFT WHERE APPLICABLE MUST REMAIN WITHIN DIMENSIONS

DIMENSION STYLE: MM ONLY
SCALE: ---
DESIGN UNITS: METRIC
THIRD ANGLE PROJECTION

DRAWN BY DATE
CHECKED BY DATE
APPROVED BY DATE

TITLE
2.0 W-B CONN. DUAL DIP
PLUG HSG ASS'Y R/A
-LEAD FREE-

molex

MATERIAL NO.: SEE NOTES
DOCUMENT NO.: SD-55959-003
SHEET NO.: 1 OF 3
SIZE: A3

THIS DRAWING CONTAINS INFORMATION THAT IS PROPRIETARY TO MOLEX INCORPORATED AND SHOULD NOT BE USED WITHOUT WRITTEN PERMISSION

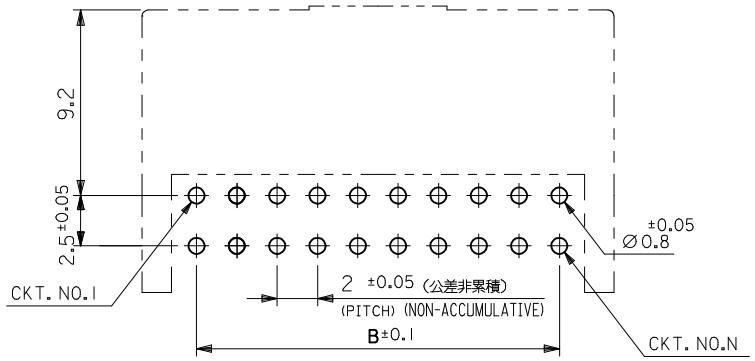

基板取付穴推奨寸法（マウント面）

RECOMMENDED P.C.BOARD HOLE DIMENSION (MOUNTING SIDE) (t = 1.2, 1.6)

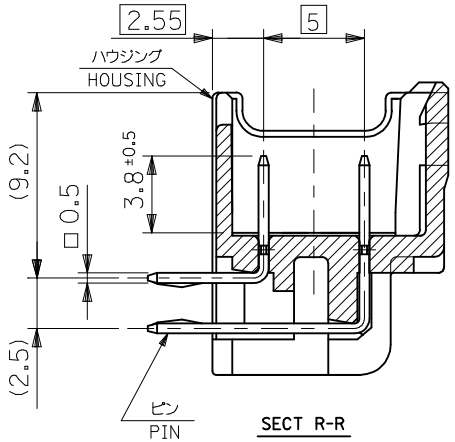

SECT R-R

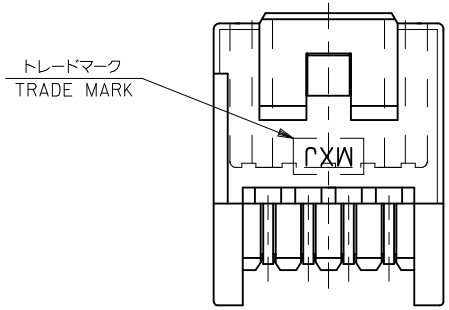

8 CIRCUIT

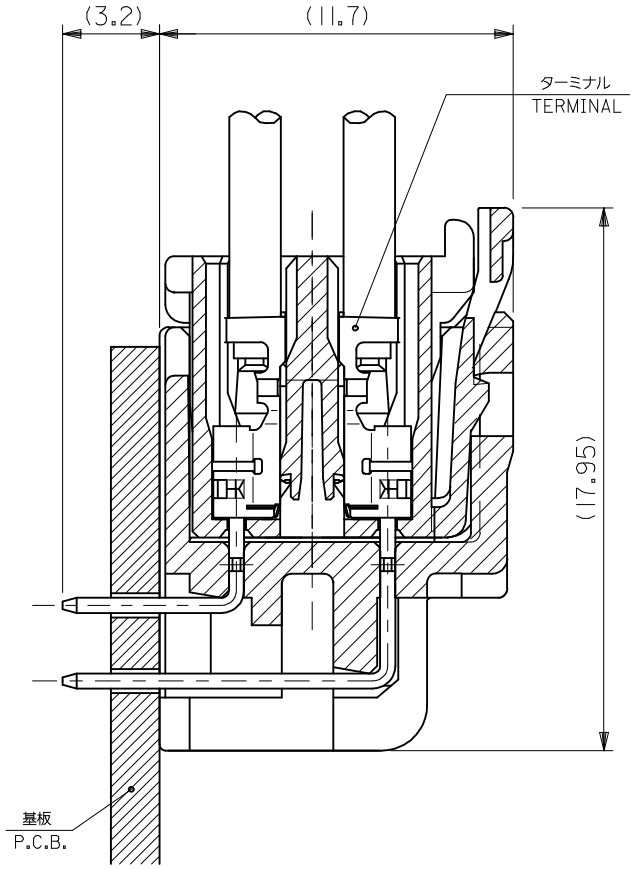

嵌合断面図（参考）

MATED DRAWING (REF.)

REVISED	EC NO: J2014-1085	DRWN:TYAJIMA01	2014/01/09
	CH'KD:	APPR:NUKITA	2014/01/09
G			

DESCRIPTION / REV

GENERAL TOLERANCES (UNLESS SPECIFIED)

10 UNDER	±0.2
10 OVER 30 UNDER	±0.25
30 OVER	±0.3
ANGULAR ±3 °	

DRAFT WHERE APPLICABLE MUST REMAIN WITHIN DIMENSIONS

DIMENSION STYLE: MM ONLY	SCALE: ---	DESIGN UNITS: METRIC	THIRD ANGLE PROJECTION
DRAWN BY / DATE	TITLE: 2.0 W-B CONN. DUAL DIP PLUG HSG ASS'Y R/A -LEAD FREE-		
CHECKED BY / DATE			
APPROVED BY / DATE	molex		
MATERIAL NO.: SEE SHEET 1	DOCUMENT NO.: SD-55959-003	SHEET NO.: 2 OF 3	
SIZE: A3			

55959-**3* CONNECTOR SERIES NO.

THIS DRAWING CONTAINS INFORMATION THAT IS PROPRIETARY TO MOLEX INCORPORATED AND SHOULD NOT BE USED WITHOUT WRITTEN PERMISSION

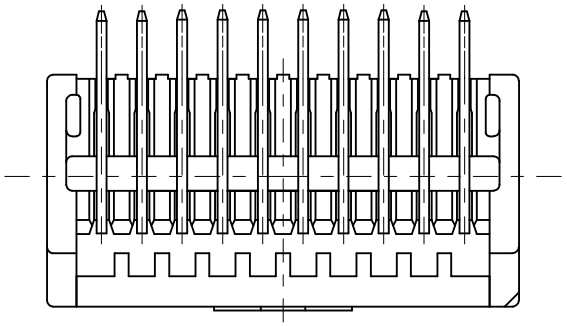

8-20 CIRCUIT

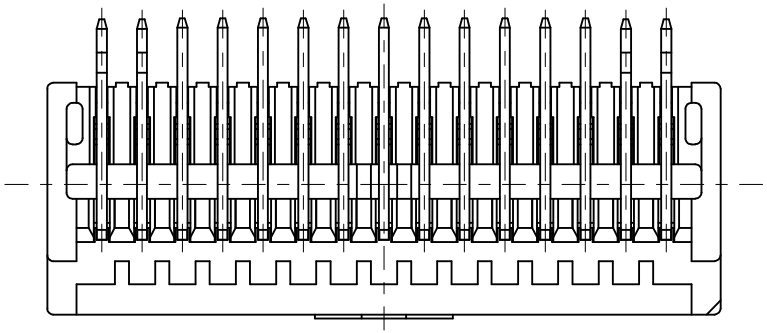

22,26,30,34,38 CIRCUIT

VIEW "T"

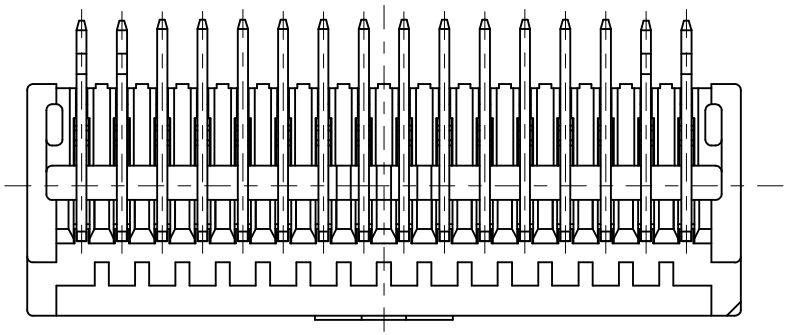

24,28,32,36,40 CIRCUIT

REVISED EC NO: J2014-1085 DRWN:TYAJIMA01 2014/01/09 CH'KD: APPR:NUKITA 2014/01/09	REV G	DESCRIPTION	GENERAL TOLERANCES (UNLESS SPECIFIED) 10 UNDER ±0.2 10 OVER 30 UNDER ±0.25 30 OVER ±0.3 ANGULAR ±3 ° DRAFT WHERE APPLICABLE MUST REMAIN WITHIN DIMENSIONS	DIMENSION STYLE MM ONLY DRAWN BY DATE CHECKED BY DATE APPROVED BY DATE MATERIAL NO. SEE SHEET 1	SCALE --- DESIGN UNITS METRIC THIRD ANGLE PROJECTION TITLE 2.0 W-B CONN. DUAL DIP PLUG HSG ASS'Y R/A -LEAD FREE- molex DOCUMENT NO. SD-55959-003 SHEET NO. 3 OF 3

55959-**3* CONNECTOR SERIES NO.

SIZE A3

THIS DRAWING CONTAINS INFORMATION THAT IS PROPRIETARY TO MOLEX INCORPORATED AND SHOULD NOT BE USED WITHOUT WRITTEN PERMISSION