| REV. | DESCRIPTION | DATE |
|---|---|---|
| A | RELEASE | 2012.11.12 |

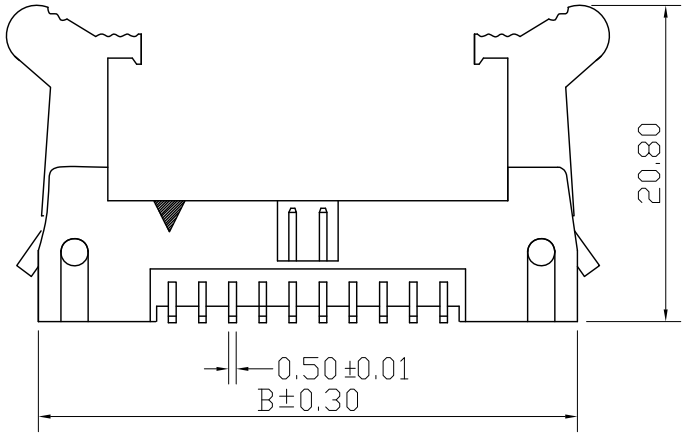


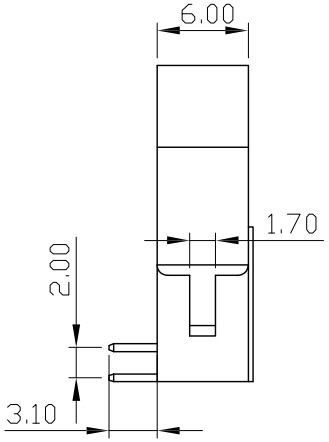


NOTES:
Insulator Material: PBT, UL 94V-0
Contact Plating: Flash Gold
Contact Material: Brass

Current Rating : 1A AC,DC
Contact Resistance: 20MΩ Max.
Dielectric Withstanding: AC 500V
Insulator Resistance: 1000MΩ Min.
Operating Temp.: -40°C~+105°C

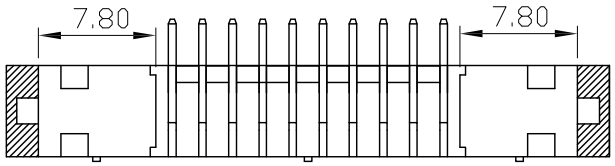


| NUMBER OF POSITIONS | DIMENSIONS | |
|---|---|---|
| | A | B |
| 06 | 4.00 | 21.60 |
| 08 | 6.00 | 23.60 |
| 10 | 8.00 | 25.60 |
| 12 | 10.00 | 27.60 |
| 14 | 12.00 | 29.60 |
| 16 | 14.00 | 31.60 |
| 20 | 18.00 | 35.60 |
| 24 | 22.00 | 39.60 |
| 26 | 24.00 | 41.60 |
| 30 | 28.00 | 45.60 |
| 34 | 32.00 | 49.60 |
| 40 | 38.00 | 55.60 |
| 44 | 42.00 | 59.60 |
| 50 | 48.00 | 65.60 |
| 60 | 58.00 | 75.60 |

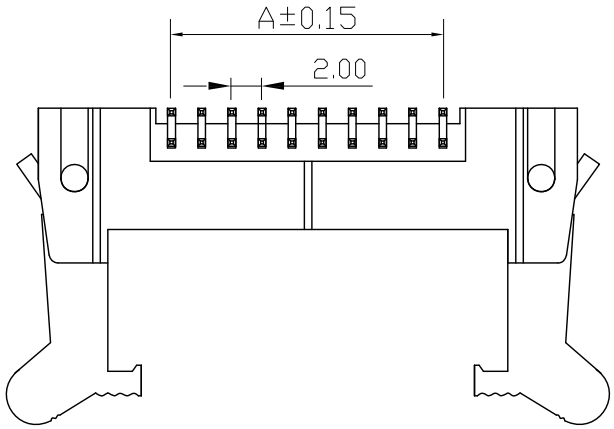


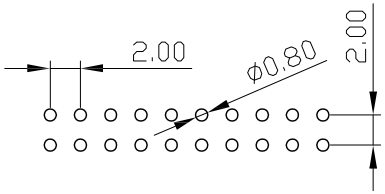


RoHS

| UNLESS TOLERANCE | | | |
|---|---|---|---|
| GENERAL | | ANGLE | |
| X. | ± 0.30 | X.° | ± 3.0° |
| .X | ± 0.20 | .X° | ± 2.0° |
| .XX | ± 0.15 | .XX° | ± 1.0° |
| .XXX | ± 0.08 | .XXX° | ± 0.5° |

| DRAW BY | |
|---|---|
| DESIGN BY | |
| CHECK BY | |
| APPROVE BY | |

| SCALE | SHEET | UNIT |
|---|---|---|
| 1:1 | 1/1 | MM |

CnC Tech,LLC

Part NO.
3110-XX-002-13-00

DRW NO:

REV: A