THIS DRAWING IS UNPUBLISHED. DIFFUSION RESTREINTE AMP
RELEASED FOR PUBLICATION 20 LIBRE A LA DIFFUSION
© COPYRIGHT 20 BY TYCO ELECTRONICS CORPORATION. ALL RIGHTS RESERVED. TOUS DROITS RESERVES.

LOC	DIST
F	00

REVISIONS

P	LTR REV	DESCRIPTION MODIFICATIONS	DATE	DWN DESS.	APVD APP.
	B	UPDATE DOT VIEW	24DEC2008	P.B	JP P
	C	UPDATE DRAWING	10JUL2009	NS	XR

SECTION B-B

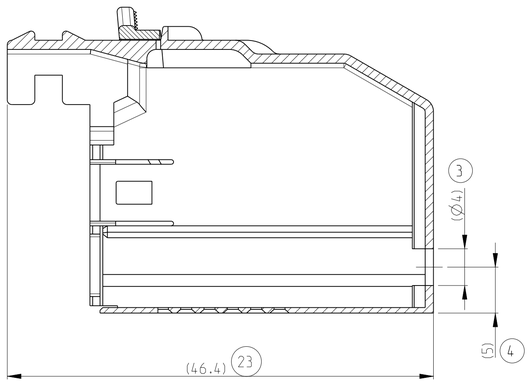

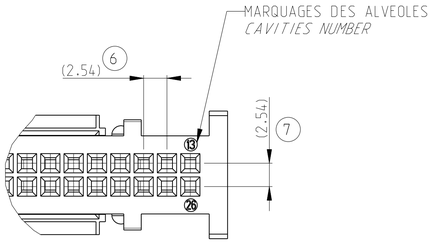

DESIGNATION DESCRIPTION	REP. ITEM	QTE QTY	MATIERE MARERIAL	REFERENCE TYCO ELECTRONICS TYCO ELECTRONICS PART NUMBER	COULEUR COLOR	DETROMPAGE POLARISATION
CAPOT COVER	A	1	PBT20%FV	185879-4	VERT GREEN	27 $13^{0}_{-0.1}$
LEVIER LEVER	B	1	PBT20%FV		NOIR BLACK	28 $9.9^{0}_{-0.1}$
CAPOT COVER	A	1	PBT20%FV	185879-3	ROUGE RED	29 $9.9^{0}_{-0.1}$
LEVIER LEVER	B	1	PBT20%FV		NOIR BLACK	30 $13^{0}_{-0.1}$
CAPOT COVER	A	1	PBT20%FV	185879-2	BLEU BLUE	31 $13^{0}_{-0.1}$
LEVIER LEVER	B	1	PBT20%FV		NOIR BLACK	
CAPOT COVER	A	1	PBT20%FV	185879-1	JAUNE YELLOW	32 $9.9^{0}_{-0.1}$
LEVIER LEVER	B	1	PBT20%FV		NOIR BLACK	

SECTION A-A

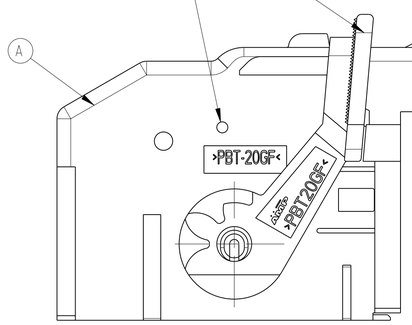

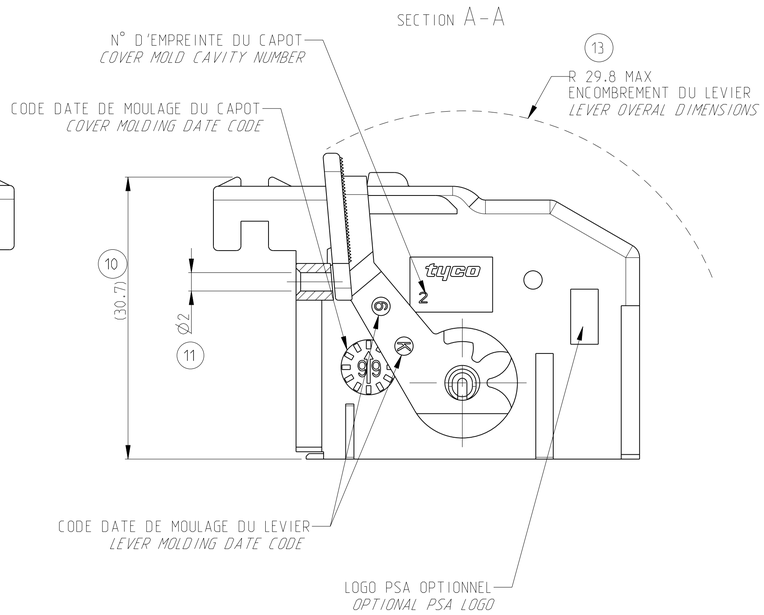

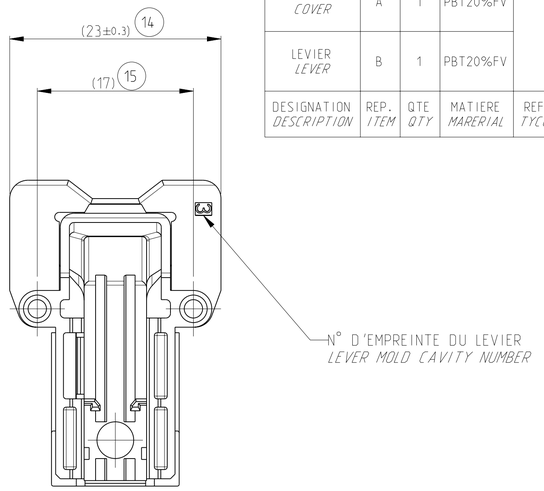

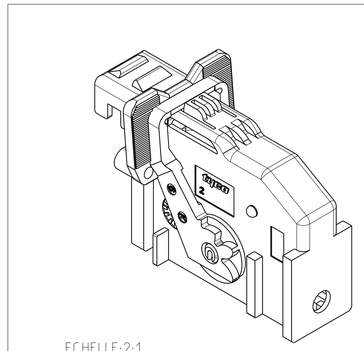

ECHELLE:2:1
SCALE

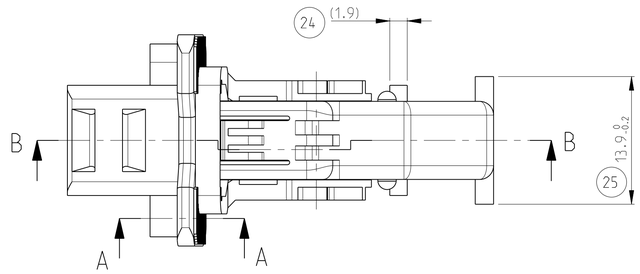

NOTE

1 - CABLAGE MAXI : 8 FILS DE SECTION 0.6 mm2
(DIA MAXI ISOLANT DE 1.9 mm)
POUR FORCE D'INSERTION MODULE/PORTE MODULE : F<20N
ET POUR ETRE EN CONFORMITE AVEC LA SPEC. 108-15158

- MAXIMAL CABLING : 8 WIRES SECTION 0.6mm2
(DIA MAXIMAL INSULATOR 1.9mm)
FOR THE INSERTION FORCE MODULE/ASSY COVER : F<20N
AND TO BE IN ACCORDANCE WITH THE SPEC. 108-15158

COMPOSANTS ASSOCIES MATING PARTS	
REF. TE TE PART NUMBER	DESIGNATION
185875-1	PORTE CLIP 26 VOIES MQS RECEPTACLE HSG 26 W MQS

185879-1	REPRESENTEE AS SHOWN

THIS DRAWING IS A CONTROLLED DOCUMENT FOR TYCO ELECTRONICS CORPORATION IT IS SUBJECT TO CHANGE AND THE CONTROLLING ENGINEERING ORGANIZATION MUST BE CONTACTED FOR THE LATEST REVISION.
CE PLAN EST UN DOCUMENT CONTROLE POUR AMP INCORPORATED.
IL EST SUSCEPTIBLE D'ETRE MODIFIE. CONTACTER LE SERVICE TECHNIQUE D'AMP DE FRANCE POUR OBTENIR LA DERNIERE REVISION.

DIMENSIONS: mm

TOLERANCES UNLESS OTHERWISE SPECIFIED: TOLERANCES NON SPECIFIEES
±0.2
ANGLES ±5°

MATERIAL MATIERE - -
FINISH FINITION - -

DWN /DESSINE 23DEC2008 Philippe BACHELOT
CHK /VERIFIE - JP PICAUD
APVD /APPROUVE - JJ REVIL
PRODUCT SPEC SPEC. PRODUIT 108-15158
APPLICATION SPEC SPEC. APPLICATION 411-15581
WEIGHT MASSE APPROX. 6.3 gr

Tyco Electronics
Tyco Electronics France SAS
95300 Pontoise, France

NAME TITRE ASSEMBLY COVER 26W MQS GENE 2
PORTE MODULE 26 VOIES MQS GENE 2
-

SIZE FORMAT	CAGE CODE	DRAWING NO No PLAN	RESTRICTED TO RESERVE A
A1	00779	C-185879	-

CUSTOMER DRAWING /PLAN CLIENT UNIQUEMENT POUR REFERENCE SCALE ECHELLE 2:1 SHEET FEUILLE 1 OF DE 1 REV C