CAD GENERATED DRAWING - NO PENCIL CHANGES ALLOWED

PART NO.	KNOB (1)	KNOB COLOR	MARKING	FOIL (3)
03480001Z	-348001-3	RED	-	-
03480002Z	-348002-3	GREEN	-	-
03480003Z	-348003-3	YELLOW	-	-
03480004Z	-348004-3	BLUE	-	-
03480005Z	-348005-3	WHITE	-	-
03480007Z	-348007-3	BLACK	-	-
03480009Z	-348009-3	GRAY	-	-
03480007ZXS7	-348007-3	BLACK	7A MAX.	-425701
03480007ZXS8	-348007-3	BLACK	8A MAX.	-425701
03480007ZXS10	-348007-3	BLACK	10A MAX.	-425701
03480007ZXS12	-348007-3	BLACK	12A MAX.	-425701
03480007ZXS15	-348007-3	BLACK	15A MAX.	-425701
03480007ZXS3	-348007-3	BLACK	3A MAX.	-425701
03480009ZXS8	-348009-3	GRAY	8A MAX.	-425701

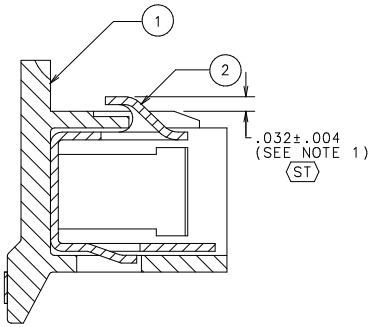

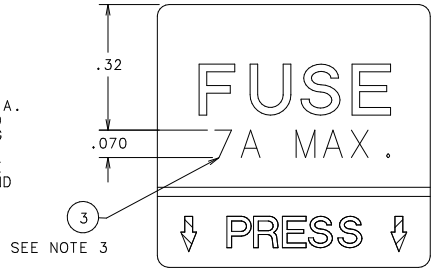

NOTES:

1. WITH KNOB ASSEMBLY POSITIONED OVER A .250 DIA. PIN, THE HEIGHT OF THE LOCK TAB MUST BE HELD TO DIMENSION SHOWN TO INSURE PROPER LATCHING WITH BODY ASSEMBLY.
2. FOIL QTY/M IS ONE HALF OF ACTUAL BECAUSE THE 1/2 WIDTH OF ROLL IS USED, THEN TURNED AROUND AND OTHER 1/2 USED.
3. AMP. MARKING IS HOT STAMPED INTO KNOB. SEE CHART FOR CORRECT MARKING.

PACKAGING NOTES:

STANDARD PACKAGE AS FOLLOWS:

PLACE KNOB ASSEMBLIES (3000 PCS MAX) INTO SMALL TOTE -580566. COVER AND APPLY BARCODE LABEL -914-796 PRINTED TO GENERAL LABEL SPEC. LS-000003.

FOR SMALLER QUANTITIES, PACK AS FOLLOWS:

QUANTITY OF ASSEMBLIES PER CONTAINER IS VARIABLE AS LONG AS CONTAINER CAN BE CLOSED WITHOUT DAMAGING PARTS. CARTONS SHOULD BE LINED WITH A BAG, SEALED WITH TAPE -088120 AND BARCODE LABELED WITH -914-796 PRINTED PER GENERAL LABEL SPEC. LS-000003.

UNLESS OTHERWISE SPECIFIED, DIMENSIONS DO NOT INCLUDE PLATING.

DENOTES CRITICAL CHARACTERISTICS.

DENOTES CPK DIMENSIONS.-MINIMUM CPK VALUE

DENOTES A CHARACTERISTIC THAT PROVIDES AN INDICATION OF PROCESS PERFORMANCE PROCEDURE FOR MEASUREMENT AND TRACKING TO BE DEFINED IN LITTELFUSE INSPECTION INSTRUCTIONS.

DENOTES CP DIMENSIONS.-MINIMUM CP VALUE MUST BE WITHIN THE DIMENSIONAL LIMITATIONS SHOWN ON DRAWING AND INITIALLY LOCATED TO ALLOW FOR MAXIMUM TOOL LIFE.

BILL OF MATERIAL

NO	COMPONENT NO	DESCRIPTION	QTY/M	U/M
4				
3	SEE CHART	TAPE, FOIL (NOTE 2)	31.25	FT
2	-348000-5	INSERT	1000	EA
1	SEE CHART	KNOB	1000	EA

MATL SPEC | FINISH

COPIES TO: 1 9 18; 2 10 19; 3 12 20; 4 13 21; 5 14 23; 6 15 33; 7 16 43; 8 17 53

DRW	KAM	DATE 12/4/97	SCALE 4:1
CHK		DATE	SUPER DRW
APPD		DATE	RAW STK WT LBS/M

TOLERANCE UNLESS OTHERWISE SPECIFIED
TWO PLACE DEC ±.01 FRACTION ±
THREE PLACE DEC ±.005 ANGULAR ±1°

TITLE: LOW PROFILE KNOB ASS'Y

Littelfuse® DES PLAINES, ILLINOIS 60016

REVISION: F

DRWG. NO. 03480001Z THRU 03480009ZXS8 FINAL

LTR	REVISION	CHK	APD
E	38882C-REVISE & REDRAWN IN NEW STRUCTURE 1/6/98 KAM		
F	38967D - TAPE FOIL WAS 375.0 FT, MARKING COL WAS		
-	LEGEND. ADDED NOTE 3. ADDED -914-796 STD PACK		
-	NOTE 02/27/98 GNK		

UNCONTROLLED DOCUMENT