THIS DRAWING IS UNPUBLISHED. RELEASED FOR PUBLICATION -,- .
© COPYRIGHT - BY TYCO ELECTRONICS CORPORATION. ALL RIGHTS RESERVED.

LOC	DIST
CM	00

REVISIONS

P	LTR	DESCRIPTION	DATE	DWN	APVD
	E2	ECO-09-017783	05AUG09	DH	DY

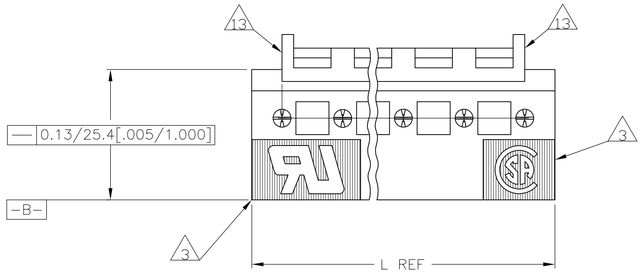

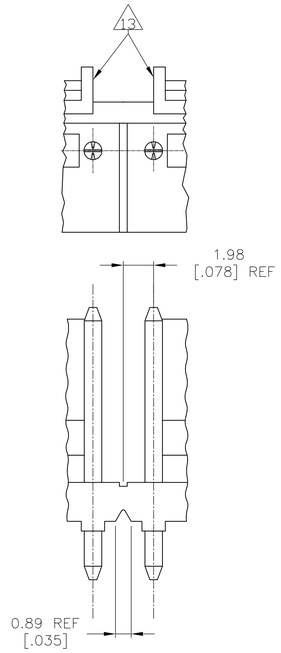

INTERRUPTED WALL FOR POSITION SIZES 6 AND ABOVE 12

1. MATERIAL
HOUSING: THERMOPLASTIC POLYESTER,GLASS FILLED,UL94V-O.
POST: COPPER ALLOY

2. FINISH
HOUSING: NATURAL
POST: BRIGHT TIN-LEAD (93/7) PLATE,0.00380-0.00880[.000150-.000350] THK OVER NICKEL UNDERPLATE,0.00130[.000050] MIN THK.

3. UL MARKING MAY NOT APPEAR ON THE 2 OR 3 POSITION SIZES.
CSA MARKING MAY NOT APPEAR ON THE 2 POSITION SIZE.

4. POST SOLDERTAILS COMPLY WITH AMP SOLDERABILITY SPEC 109-11-2.

5. POST WITHSTANDS 13.34N [3 LB] MIN AXIAL FORCE IN EITHER DIRECTION WITHOUT DISLODGING.

6. APPLIES AT -A- .

7. APPLIES WHEN THE HEADER IS STRAIGHT.

8. PLASTIC PROJECTIONS PERMITTED IN THIS ZONE.

9. COORDINATE DIMENSIONS APPLIES FROM THE CENTER OF THE ACTUAL FEATURE.

10. SOLDER SIDE OF BOARD IS SHOWN.

11. DIMENSIONS IN BRACKETS ARE IN INCHES.

12. ALL POSITION SIZES HAVE THE BACKWALL NOTCHED ON BOTH ENDS AS SHOWN. THE 2 THRU 5 POSITION SIZES HAVE SOLID BACKWALLS. POSITION SIZES 6 AND ABOVE HAVE AN INTERRUPTED BACKWALL AT VARIOUS LOCATIONS (SEE TABLE FOR INTERRUPTION(S) LOCATIONS).

13. EDGE OF POLARIZING LOCK WALL TO BE IN LINE WITH CENTERLINE OF ADJACENT POST WITHIN ±0.13 [.005]

14. FINISH
HOUSING: NATURAL
POST: MATTE TIN PLATE 0.000150 MIN THICK OVER NICKEL,

15. OBSOLETE PER CIS STREAMLINING

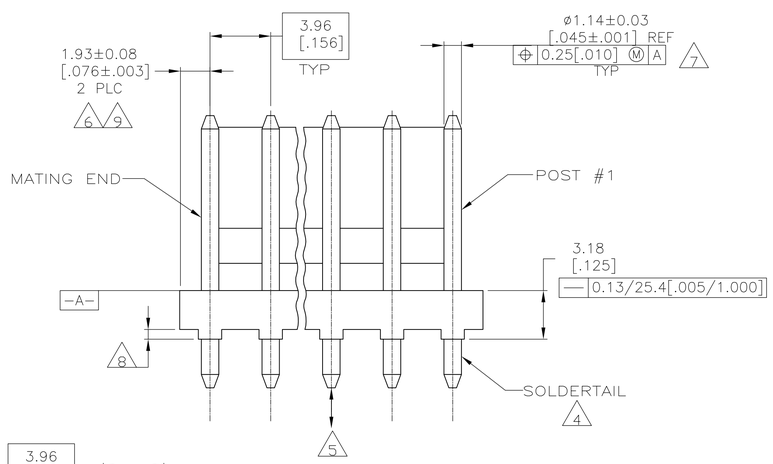

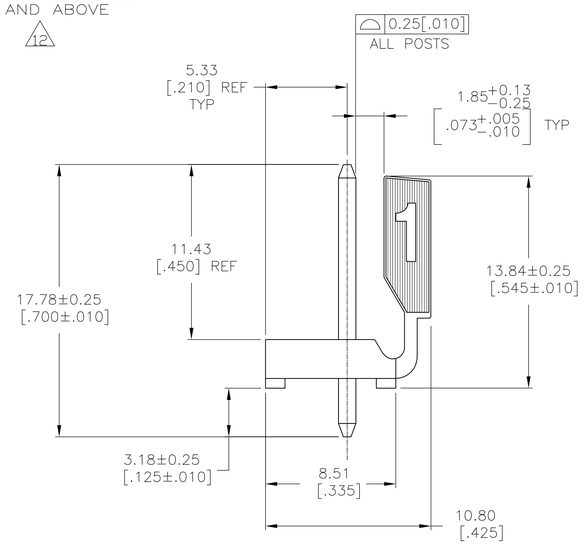

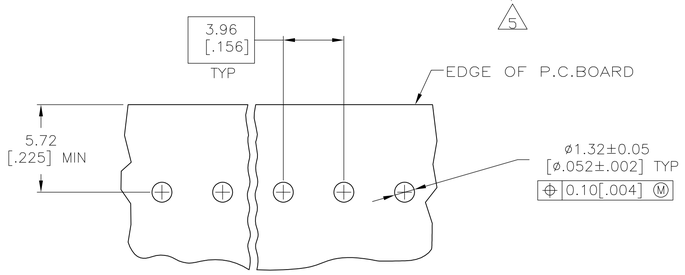

RECOMMENDED MOUNTING HOLE PATTERN FOR 1.57[.062] THICK P.C. BOARD 10

METRIC

FINISH	NOTES	BACKWALL INTERRUPTION(S) BETWEEN POST	L	NO. OF POSITIONS	PART NO
14	15	4&5, 7&8, 11&12, 14&15	71.20 [2.803]	18	4-644614-8
		4&5, 7&8, 10&11, 13&14	67.23 [2.647]	17	4-644614-7
		4&5, 8&9, 12&13	63.27 [2.491]	16	4-644614-6
		4&5, 8&9, 11&12	59.31 [2.335]	15	4-644614-5
		4&5 7&8, 10&11	55.35 [2.179]	14	4-644614-4
		4&5 7&8, 10&11	51.38 [2.023]	13	4-644614-3
		4&5, 8&9	47.42 [1.867]	12	4-644614-2
		4&5, 7&8	43.46 [1.711]	11	4-644614-1
		3&4, 7&8	39.50 [1.555]	10	4-644614-0
		3&4, 6&7	35.53 [1.399]	9	3-644612-9
		4&5	31.57 [1.243]	8	3-644612-8
		4&5	27.61 [1.087]	7	3-644612-7
		3&4	23.65 [.931]	6	3-644612-6
		NONE	19.69 [.775]	5	3-644612-5
		NONE	15.72 [.619]	4	3-644612-4
	15	NONE	11.76 [.463]	3	3-644612-3
14	ACTIVE	NONE	7.80 [.307]	2	3-644612-2
2	15	4&5, 7&8, 11&12, 14&15	71.20 [2.803]	18	1-644612-8
		4&5, 7&8, 10&11, 13&14	67.23 [2.647]	17	1-644612-7
		4&5, 8&9, 12&13	63.27 [2.491]	16	1-644612-6
		4&5, 8&9, 11&12	59.31 [2.335]	15	1-644612-5
		4&5 7&8, 10&11	55.35 [2.179]	14	1-644612-4
		4&5 7&8, 10&11	51.38 [2.023]	13	1-644612-3
		4&5, 8&9	47.42 [1.867]	12	1-644612-2
		4&5, 7&8	43.46 [1.711]	11	1-644612-1
		3&4, 7&8	39.50 [1.555]	10	1-644612-0
		3&4, 6&7	35.53 [1.399]	9	644612-9
		4&5	31.57 [1.243]	8	644612-8
		4&5	27.61 [1.087]	7	644612-7
		3&4	23.65 [.931]	6	644612-6
		NONE	19.69 [.775]	5	644612-5
		NONE	15.72 [.619]	4	644612-4
		NONE	11.76 [.463]	3	644612-3
2	15	NONE	7.80 [.307]	2	644612-2

THIS DRAWING IS A CONTROLLED DOCUMENT.

DIMENSIONS: mm [INCHES]

TOLERANCES UNLESS OTHERWISE SPECIFIED:
0 PLC ± -
1 PLC ± -
2 PLC ± 0.13[.005]
3 PLC ± -
4 PLC ± -
ANGLES ± -

MATERIAL 1
FINISH 2

DWN L.SMITH 6-12-93
CHK R.SWING 6-12-93
APVD D.CLARK 15-12-93
PRODUCT SPEC —
APPLICATION SPEC —
WEIGHT —

Tyco Electronics
Tyco Electronics Corporation
Harrisburg, Pa 17105-3608

NAME MTA-156 HEADER ASSEMBLY, POLARIZED LOCK, STRAIGHT, .045 ROUND POST,TIN-LEAD PLATED,WITHOUT RETENTION PEGS

SIZE A1 | CAGE CODE 00779 | DRAWING NO C-644612 | RESTRICTED TO —

CUSTOMER DRAWING | SCALE 5:1 | SHEET 1 OF 1 | REV E2