THIS DRAWING IS UNPUBLISHED. RELEASED FOR PUBLICATION -.- .
© COPYRIGHT - BY TYCO ELECTRONICS CORPORATION. ALL RIGHTS RESERVED.

LOC	DIST
00	GP

REVISIONS

P	LTR	DESCRIPTION	DATE	DWN	APVD
	O	RELEASED PER EC OS13-0087-05	20SEP05	GP	JG

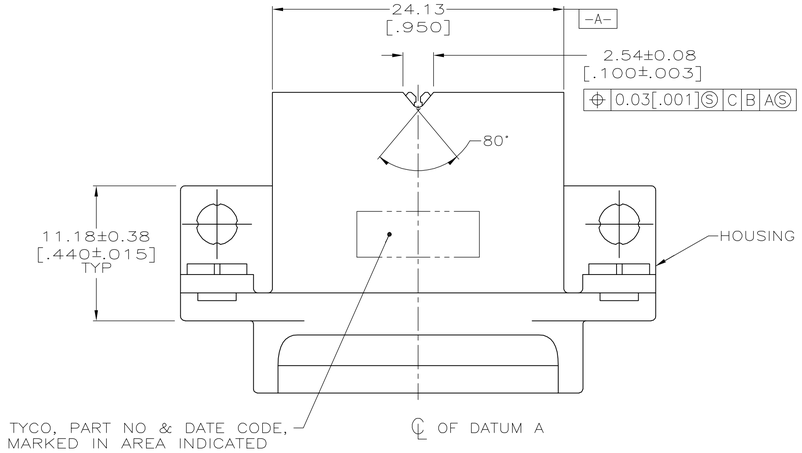

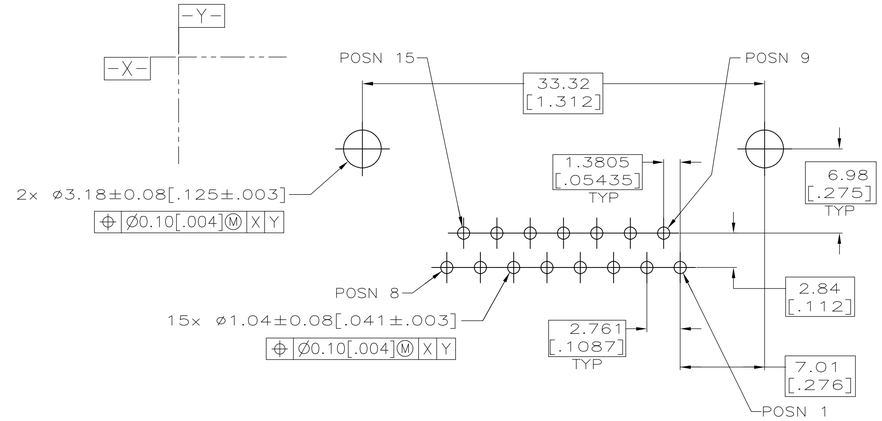

PC BOARD MOUNTING DIMENSIONS

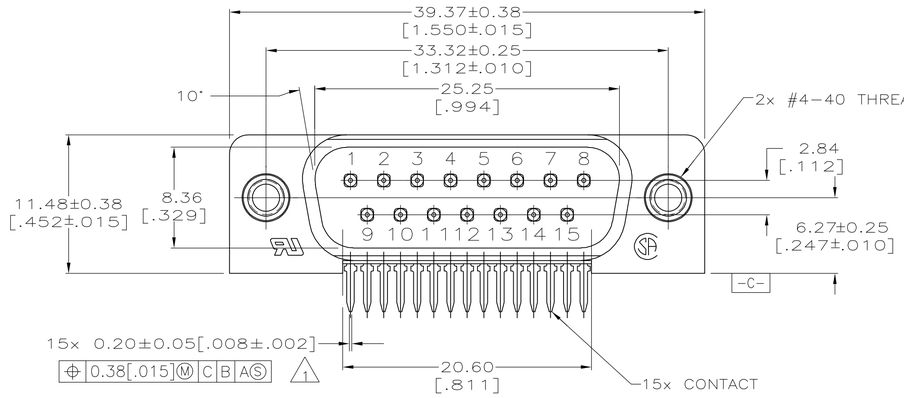

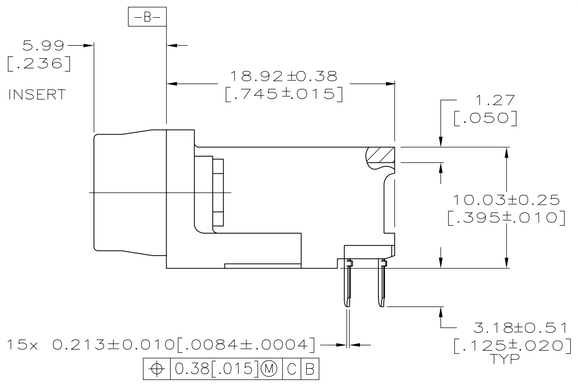

1. POSITION TOLERANCE APPLIES AT TIP ONLY.
2. HOUSING: FLAME RETARDENT, 94V-0 RATED, GLASS FILLED NYLON OR POLYESTER, COLOR; BLACK.
   CONTACTS: BRASS
   INSERTS: ZINC
3. CONTACTS: GOLD PLATED FOR A LENGTH OF 3.81[.150] MIN FROM MATING END, 0.76 µm[.000030] MIN GOLD IN MATED AREA, 2.54 µm [.0001] MIN TIN FOR A LENGTH OF 3.68 [.145] MIN FROM OPPOSITE END, BOTH OVER 1.27 µm[.000050] MIN NICKEL.
   INSERTS: CLEAR CHROMATE COATING.

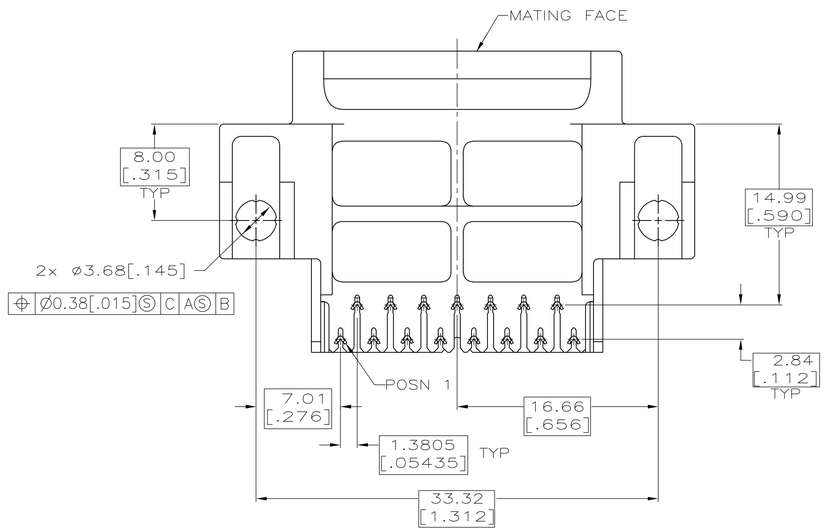

COPYRIGHT 2005
TYCO ELECTRONICS CORP
ALL RIGHTS RESERVED

5748872-1
PART NO

THIS DRAWING IS A CONTROLLED DOCUMENT.

DIMENSIONS: mm [INCHES]

TOLERANCES UNLESS OTHERWISE SPECIFIED:
0 PLC ± -
1 PLC ± -
2 PLC ± .13[.005]
3 PLC ± -
4 PLC ± -
ANGLES ± -

MATERIAL 2
FINISH 3

DWN G.PETERS	20SEP05	tyco Electronics — Tyco Electronics Corporation, Harrisburg, PA 17105-3608
CHK S.BOLASH	20SEP05	
APVD M.WALMSLEY	20SEP05	NAME: PLUG ASSEMBLY, SIZE 2, 15 POSN., ALL PLASTIC, RIGHT ANGLE, .590 SERIES, AMPLIMITE III
PRODUCT SPEC 108-1226		
APPLICATION SPEC 114-40027		
WEIGHT -		SIZE A1 · CAGE CODE 00779 · DRAWING NO C-5748872 · RESTRICTED TO —
CUSTOMER DRAWING		SCALE 1:1 · SHEET 1 OF 1 · REV O

AMP 4805 REV 31MAR2000