Alle Rechte vorbehalten/ *All rights reserved*

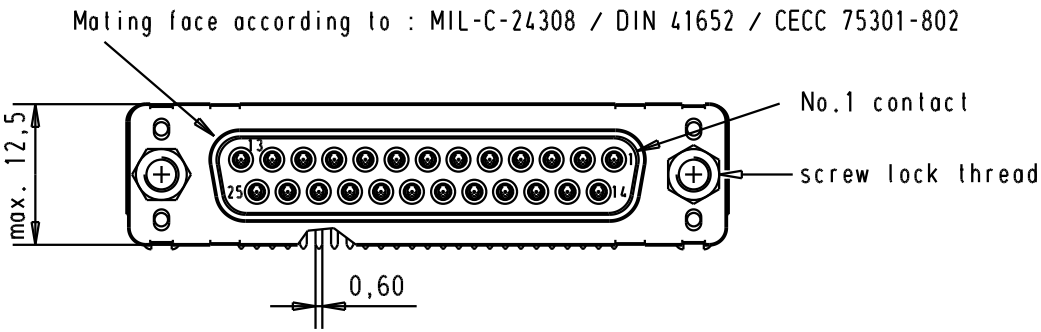

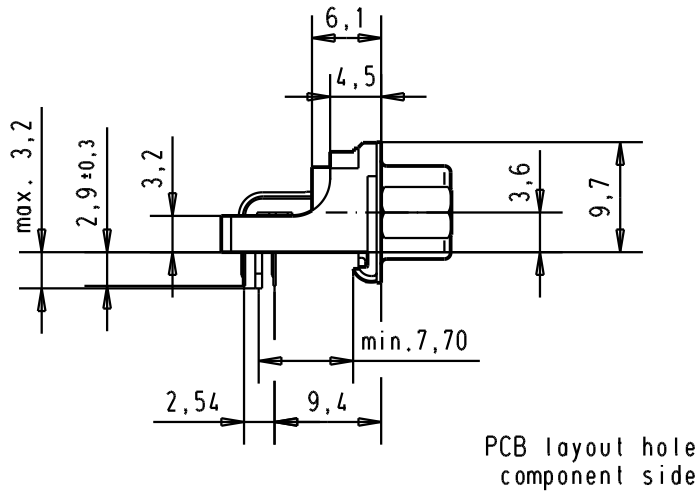

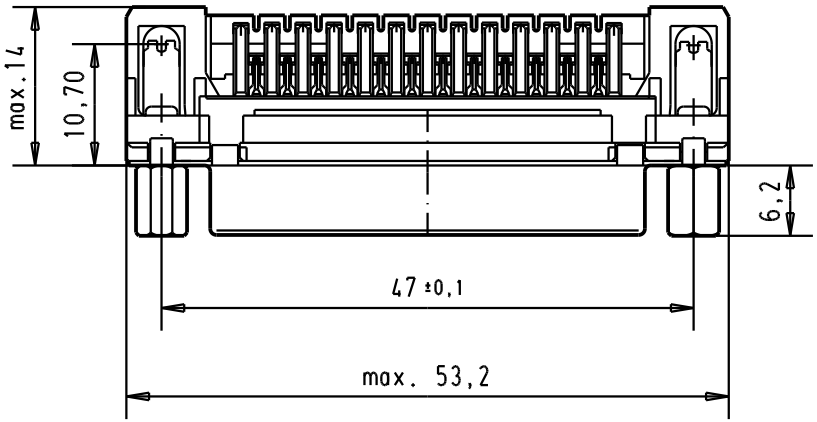

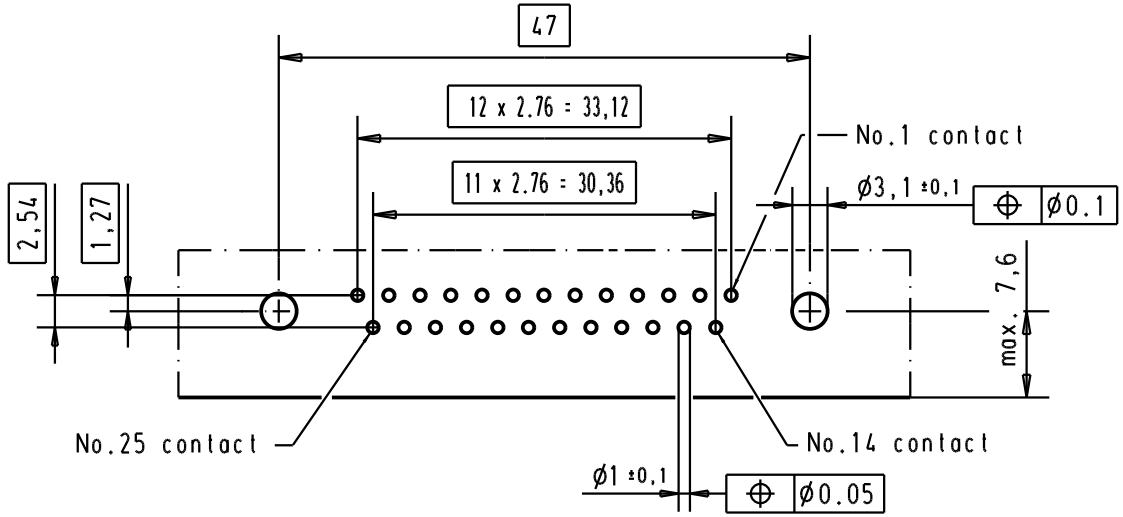

Connector retention and insertion forces on the PCB = 25 / 80 newtons

Part number	Screw lock thread	Performance level	Mod.	Dat.	Name
			31892	05/05/04	JH
			31084	04/SEP/02	YT
09 66 352 3617	4-40 UNC	1	27961	24/nov/00	jfb
09 66 352 6617	4-40 UNC	2	27952	26/oct/00	jfb
09 66 352 7617	4-40 UNC	3	27948	02/sept/00	jfb

	Dat.	Name
Detail.	02/sept/00	jfb
Insp.		
Stand.		

All Dim. in mm
Orig. Size DIN A 4

D-Sub 25 poles low profil angle female,solder pin with screw lock and grounding board lock.

Maßstab/ *Scale* 1.5:1

HARTING EURL
F-95972 Paris

TB 0966352x61x

Sub.

Blatt/ *Page* 3/5