# Supercapacitor Product Specification

Rev 35

Cellergy—Pulse Power on Demand!

Cellergy Ltd.

Telephone: +972-4-6417267
Fax: +972-4-6417132
E-Mail: sales-cellergy@cellergycap.com
Web: www.cellergycap.com

The information contained in this document, or any addendum or revision thereof is proprietary of Cellergy Ltd. and is subject to all relevant copyright, patent and other laws and treaties protecting intellectual property, as well as any specific agreement protecting Cellergy Ltd. rights in the aforesaid information. Any use of this document or the information contained herein for any purposes other than those for which it was disclosed is strictly forbidden.
Cellergy Ltd. reserves the right, without prior notice or liability, to make changes in equipment design or specifications. Cellergy Ltd. assumes no responsibility for the use thereof nor for the rights of third parties, which may be affected in any way by the use thereof.

This document may contain flaws, omissions or typesetting errors; no warranty is granted nor liability assumed in relation thereto unless specifically undertaken in Cellergy Ltd.'s sales contract or order confirmation.
The information presented in this document is subject to change without notice. This document is periodically updated and changes will be incorporated into subsequent editions. If you have encountered an error, please notify Cellergy Ltd.
All specifications are subject to change without prior notice.

© Copyright by Cellergy Ltd., 2013. All rights reserved worldwide.

# Document History

| Revision Number | Revision Date | Author | Revision Description |
|---|---|---|---|
| 35 | 30 Nov 2013 | Semion Simma | General update and addition of appendices |
| 34 | 13 Feb 2013 | Semion Simma | Height and ESR were modified for:<br>• CLC___L12<br>• CLK___L17<br>• CLK___L28<br>• CLG___L48 |
| 33 | 27 Dec 2012 | Semion Simma | The height of CL___48 parts was increased |
| 32 | 21 Nov 2012 | Semion Simma | Drawings of new trays were added |

# List of Acronyms

| Acronym | Meaning |
|---|---|
| EDLC | Electrochemical Double Layer Capacitor (a/k/a Supercapacitor) |
| ESR | Equivalent Series Resistance |
| RoHS | Restriction of Hazardous Substances |
| SC | Supercapacitor |
| LC | Leakage Current |

# Table of Contents


CHAPTER 1 INTRODUCTION . . . . . 4

CHAPTER 2 APPLICATIONS . . . . . 5

CHAPTER 3 ORDERING INFORMATION . . . . . 6

Part Number System . . . . . 6

CHAPTER 4 LINE CARDS . . . . . 7

12 x 12.5 mm Line Cards . . . . . 8

CLG: General Purpose Line Cards . . . . . 8

CLC: Low Leakage Line Cards . . . . . 8

17 x 17.5 mm Line Cards . . . . . 9

CLG: General Purpose Line Cards . . . . . 9

CLK: Extra Capacitance Line Cards . . . . . 9

28 x 17.5 mm Line Cards . . . . . 10

CLG: General Purpose Line Cards . . . . . 10

CLK: Extra Capacitance Line Cards . . . . . 10

48 x 30 mm Line Cards . . . . . 11

CLG: General Purpose Line Cards . . . . . 11

CHAPTER 5 GENERAL SPECIFICATIONS . . . . . 12

CHAPTER 6 MECHANICAL DIMENSIONS . . . . . 13

Through-Hole Leads, Single . . . . . 13

Through-Hole Leads, Double . . . . . 14

Flat Leads, Single . . . . . 15

Flat Leads, Double . . . . . 16

CHAPTER 7 CELL STRUCTURE . . . . . 17

CHAPTER 8 PACKING . . . . . 18

Packing CL___12 Supercapacitors . . . . . 18

Packing CL___17 Supercapacitors . . . . . 19

Packing CL___28 Supercapacitors . . . . . 20

CHAPTER 9 QUALIFICATION TEST SUMMARY . . . . . 21

CHAPTER 10 MEASURING METHOD OF CHARACTERISTICS . . . . . 22

CHAPTER 11 TYPICAL CAPACITOR CHARACTERISTICS . . . . . 23

ESR vs. Temperature . . . . . 23

Capacitance vs. Temperature . . . . . 23

Capacitance vs. Frequency . . . . . 23

APPENDIX A BACKGROUND . . . . . 24

APPENDIX B SOLDERING METHODS . . . . . 31

APPENDIX C SAFETY AND OPERATIONAL PRECAUTIONS . . . . . 32

APPENDIX D WARRANTY . . . . . 33

Advancements in wireless technology have led to the introduction of a wide array of battery-powered devices. Many of these devices – such as GPS/GPRS transceivers, active RFID tags, industrial PDAs, electronic locks, micro medical pumps, digital cameras, mobile phones and others—require short, but powerful current pulses that often go beyond the capabilities of standard batteries, requiring the use of larger, more expensive solutions.

Developers require a solution that meets all power requirements while lowering system costs and reducing device footprints.

**Introducing the Cellergy family of high-efficiency, flat supercapacitors for pulse applications.**

Cellergy's supercapacitors are designed to supply peak power to a wide array of devices requiring short, but powerful current pulses that are beyond the capabilities of standard batteries:

Cellergy's Product Lines:

- CLG – General-purpose supercapacitor for use in consumer and industrial products
- CLK – Offers extra capacitance for high-current applications and an extended working temperature range
- CLC – Offers low leakage current for extra-long battery life – without compromising on power density

# Cellergy – Pulse Power on Demand!

# Chapter 2
# Applications

Cellergy's supercapacitors are designed to supply long-lasting power to a wide array of devices requiring short, but powerful current pulses that are beyond the capabilities of standard batteries.

A partial list of Cellergy Supercapacitor applications:

Camera Flash

RFID

SSD Backup

Wireless Toys

AMRs

Energy Harvesting

GPRS Modules

Wireless Speakers

Electronic Locks

PDAs

Micro Medical Pumps

## Part Number System

**CLG 02 P 080 L 17 V800**

### SERIES NAME
- CLG (General Purpose)
- CLC (Low Leakage)
- CLK (Extra Capacitance)

### NOMINAL VOLTAGE
- 01 (1.4V)
- 02 (2.1V)
- 28 (2.8V)
- 03 (3.5V)
- 04 (4.2V)
- 49 (4.9V)
- 05 (5.5V)
- 06 (6.3V)
- 09 (9V)
- 12 (12V)

### CASING TYPES
- P (Prismatic)

### CAPACITANCE
- 080 (80 mF)

### LEADS
- F (Flat)
- L (Through Hole)

### CASING SIZE
- 10 (10 x 15 mm)
- 12 (12 x 12.5 mm)
- 17 (17 x 17.5 mm)
- 28 (28 x 17.5 mm)
- 48 (48 x 30.5 mm)

### SUFFIX
- used for non-standard products (i.e. V800)

### NOTES
A **single** supercapacitor consists of one cell.
A **double** supercapacitor is constructed from two cells in parallel.
All electrical ratings are measured at room temperature.

# Line Cards

The tables appearing in this chapter describe examples of supercapacitors that can be ordered from Cellergy. Cellergy's supercapacitors support a wide range of voltage requirements—from 0.7 V to 18.0 V.

For different or special requirements, please consult with your Cellergy representative.

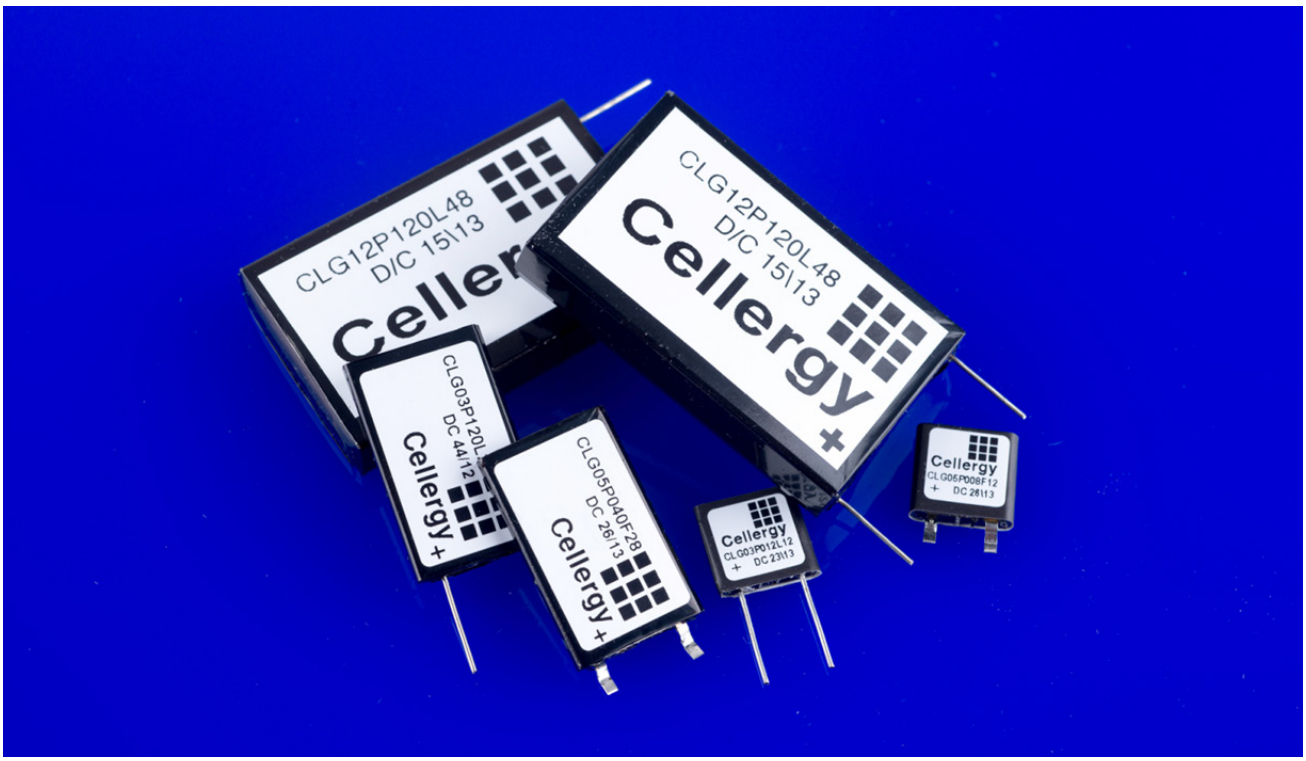

## CLG: General Purpose Line Cards

| | Part Number | Nominal Voltage (Volts) | ESR (mΩ) | Capacitance (mF) | Maximum Allowed LC (µA) | Length (mm) | Width (mm) | Height (mm) | Pitch (mm) * | Weight (grams) |
|---|---|---|---|---|---|---|---|---|---|---|
| 12×12.5 Single | CLG03P012L12 | 3.5 | 600 | 12 | 3 | 12 | 12.5 | 2.4 | 8.0 | 1.3 |
| | CLG04P010L12 | 4.2 | 720 | 10 | 3 | 12 | 12.5 | 2.6 | 8.0 | 1.4 |
| | CLG05P008L12 | 5.5 | 1000 | 8 | 3 | 12 | 12.5 | 3.1 | 8.0 | 1.5 |
| | CLG06P007L12 | 6.3 | 1200 | 7 | 3 | 12 | 12.5 | 3.4 | 8.0 | 1.6 |
| 12×12.5 Double | CLG03P025L12 | 3.5 | 300 | 25 | 6 | 12 | 12.5 | 3.4 | 8.0 | 1.6 |
| | CLG04P020L12 | 4.2 | 360 | 20 | 6 | 12 | 12.5 | 3.9 | 8.0 | 1.7 |
| | CLG05P016L12 | 5.5 | 500 | 16 | 6 | 12 | 12 | 4.8 | 8.0 | 1.8 |
| | CLG06P012L12 | 6.3 | 600 | 12 | 6 | 12 | 12.5 | 5.3 | 8.0 | 1.9 |

## CLC: Low Leakage Line Cards

| | Part Number | Nominal Voltage (Volts) | ESR (mΩ) | Capacitance (mF) | Maximum Allowed LC (µA) | Length (mm) | Width (mm) | Height (mm) | Pitch (mm) * | Weight (grams) |
|---|---|---|---|---|---|---|---|---|---|---|
| 12×12.5 Single | CLC03P012L12 | 3.5 | 600 | 12 | 1.5 | 12 | 12.5 | 2.4 | 8.0 | 1.3 |
| | CLC04P010L12 | 4.2 | 720 | 10 | 1.5 | 12 | 12.5 | 2.9 | 8.0 | 1.4 |
| 12×12.5 Double | CLC03P025L12 | 3.5 | 330 | 25 | 3 | 12 | 12.5 | 3.7 | 8.0 | 1.6 |
| | CLC04P020L12 | 4.2 | 390 | 20 | 3 | 12 | 12.5 | 4.2 | 8.0 | 1.7 |

### NOTES

* For supercapacitors with flat leads, the pitch is 7.3 mm instead of 8 mm.

Cellergy

## CLG: General Purpose Line Cards

| | Part Number | Nominal Voltage (Volts) | ESR (mΩ) | Capacitance (mF) | Maximum Allowed LC (µA) | Length (mm) | Width (mm) | Height (mm) | Pitch (mm) | Weight (grams) |
|---|---|---|---|---|---|---|---|---|---|---|
| 17×17.5 Single | CLG02P040L17 | 2.1 | 180 | 40 | 6 | 17 | 17.5 | 2.2 | 11 | 2.6 |
| | CLG03P025L17 | 3.5 | 300 | 25 | 6 | 17 | 17.5 | 2.4 | 11 | 2.7 |
| | CLG04P020L17 | 4.2 | 360 | 20 | 6 | 17 | 17.5 | 2.6 | 11 | 2.8 |
| | CLG05P015L17 | 5.5 | 480 | 15 | 6 | 17 | 17.5 | 3.1 | 11 | 3 |
| 17×17.5 Double | CLG02P080L17 | 2.1 | 90 | 80 | 12 | 17 | 17.5 | 2.5 | 11 | 3.2 |
| | CLG03P050L17 | 3.5 | 150 | 50 | 12 | 17 | 17.5 | 3.4 | 11 | 3.3 |
| | CLG04P040L17 | 4.2 | 180 | 40 | 12 | 17 | 17.5 | 3.9 | 11 | 3.4 |
| | CLG05P030L17 | 5.5 | 240 | 30 | 12 | 17 | 17.5 | 4.8 | 11 | 3.6 |

## CLK: Extra Capacitance Line Cards

| | Part Number | Nominal Voltage (Volts) | ESR (mΩ) | Capacitance (mF) | Maximum Allowed LC (µA) | Length (mm) | Width (mm) | Height (mm) | Pitch (mm) | Weight (grams) |
|---|---|---|---|---|---|---|---|---|---|---|
| 17×17.5 Single | CLK03P050L17 | 3.5 | 310 | 50 | 6 | 17 | 17.5 | 2.9 | 11 | 2.7 |
| | CLK04P040L17 | 4.2 | 370 | 40 | 6 | 17 | 17.5 | 3.2 | 11 | 2.8 |
| | CLK05P030L17 | 5.5 | 490 | 30 | 6 | 17 | 17.5 | 3.8 | 11 | 3 |
| 17×17.5 Double | CLK03P100L17 | 3.5 | 155 | 100 | 12 | 17 | 17.5 | 4.5 | 11 | 3.3 |
| | CLK04P080L17 | 4.2 | 185 | 80 | 12 | 17 | 17.5 | 5.2 | 11 | 3.4 |
| | CLK05P060L17 | 5.5 | 245 | 60 | 12 | 17 | 17.5 | 6.3 | 11 | 3.6 |

## CLC: Low Leakage Line Cards

| | Part Number | Nominal Voltage (Volts) | ESR (mΩ) | Capacitance (mF) | Maximum Allowed LC (µA) | Length (mm) | Width (mm) | Height (mm) | Pitch (mm) | Weight (grams) |
|---|---|---|---|---|---|---|---|---|---|---|
| 17×17.5 Single | CLC03P035L17 | 3.5 | 380 | 35 | 3 | 17 | 17.5 | 2.7 | 11 | 2.7 |
| | CLC04P030L17 | 4.2 | 440 | 30 | 3 | 17 | 17.5 | 2.9 | 11 | 2.8 |
| | CLC05P020L17 | 5.5 | 560 | 20 | 3 | 17 | 17.5 | 3.4 | 11 | 3 |
| 17×17.5 Double | CLC03P070L17 | 3.5 | 190 | 70 | 6 | 17 | 17.5 | 4.0 | 11 | 3.3 |
| | CLC04P060L17 | 4.2 | 220 | 60 | 6 | 17 | 17.5 | 4.5 | 11 | 3.4 |
| | CLC05P040L17 | 5.5 | 280 | 40 | 6 | 17 | 17.5 | 5.4 | 11 | 3.6 |

## CLG: General Purpose Line Cards

| | Part Number | Nominal Voltage (Volts) | ESR (mΩ) | Capacitance (mF) | Maximum Allowed LC (µA) | Length (mm) | Width (mm) | Height (mm) | Pitch (mm) | Weight (grams) |
|---|---|---|---|---|---|---|---|---|---|---|
| 28 × 17.5 Single | CLG03P060L28 | 3.5 | 130 | 60 | 10 | 28 | 17.5 | 2.4 | 11 | 4.3 |
| | CLG04P050L28 | 4.2 | 150 | 50 | 10 | 28 | 17.5 | 2.6 | 11 | 4.5 |
| | CLG05P040L28 | 5.5 | 200 | 40 | 10 | 28 | 17.5 | 3.1 | 11 | 4.8 |
| | CLG06P035L28 | 6.3 | 230 | 35 | 10 | 28 | 17.5 | 3.4 | 11 | 5.3 |
| | CLG12P015L28 | 12 | 445 | 15 | 10 | 28 | 17.5 | 5.4 | 11 | 6.4 |
| 28 × 17.5 Double | CLG03P120L28 | 3.5 | 65 | 120 | 20 | 28 | 17.5 | 3.4 | 11 | 5.3 |
| | CLG04P100L28 | 4.2 | 75 | 100 | 20 | 28 | 17.5 | 3.9 | 11 | 5.4 |
| | CLG05P080L28 | 5.5 | 100 | 80 | 20 | 28 | 17.5 | 4.8 | 11 | 5.7 |
| | CLG06P070L28 | 6.3 | 115 | 70 | 20 | 28 | 17.5 | 5.4 | 11 | 6.3 |
| | CLG12P030L28 | 12 | 225 | 30 | 20 | 28 | 17.5 | 9 | 11 | 7.1 |

## CLK: Extra Capacitance Line Cards

| | Part Number | Nominal Voltage (Volts) | ESR (mΩ) | Capacitance (mF) | Maximum Allowed LC (µA) | Length (mm) | Width (mm) | Height (mm) | Pitch (mm) | Weight (grams) |
|---|---|---|---|---|---|---|---|---|---|---|
| 28 × 17.5 Single | CLK03P120L28 | 3.5 | 170 | 120 | 10 | 28 | 17.5 | 3.1 | 11 | 4.3 |
| | CLK04P100L28 | 4.2 | 190 | 100 | 10 | 28 | 17.5 | 3.4 | 11 | 4.5 |
| | CLK05P080L28 | 5.5 | 240 | 80 | 10 | 28 | 17.5 | 3.8 | 11 | 4.8 |
| | CLK12P030L28 | 12 | 460 | 30 | 10 | 28 | 17.5 | 6.8 | 11 | 7.8 |
| 28 × 17.5 Double | CLK03P240L28 | 3.5 | 85 | 240 | 20 | 28 | 17.5 | 4.8 | 11 | 5.3 |
| | CLK04P200L28 | 4.2 | 95 | 200 | 20 | 28 | 17.5 | 5.3 | 11 | 5.4 |
| | CLK05P160L28 | 5.5 | 120 | 160 | 20 | 28 | 17.5 | 6.5 | 11 | 5.7 |
| | CLK12P060L28 | 12 | 230 | 60 | 20 | 28 | 17.5 | 12 | 11 | 8.1 |

## CLG: General Purpose Line Cards

| | Part Number | Nominal Voltage (Volts) | ESR (mΩ) | Capacitance (mF) | Maximum Allowed LC (µA) | Length (mm) | Width (mm) | Height (mm) | Pitch (mm) | Weight (grams) |
|---|---|---|---|---|---|---|---|---|---|---|
| 48×30 Double | CLG02P700L48 | 2.1 | 18 | 700 | 65 | 48 | 30.5 | 3.3 | 22.3 | 18.5 |
| | CLG03P420L48 | 3.5 | 30 | 420 | 65 | 48 | 30.5 | 4.2 | 22.3 | 19.5 |
| | CLG04P350L48 | 4.2 | 36 | 350 | 65 | 48 | 30.5 | 4.7 | 22.3 | 20 |
| | CLG05P280L48 | 5.5 | 48 | 280 | 65 | 48 | 30.5 | 5.6 | 22.3 | 21.2 |
| | CLG06P245L48 | 6.3 | 54 | 245 | 65 | 48 | 30.5 | 6.1 | 22.3 | 21.7 |
| | CLG09P165L48 | 9 | 78 | 165 | 65 | 48 | 30.5 | 8 | 22.3 | 25.2 |
| | CLG12P120L48 | 12 | 108 | 120 | 65 | 48 | 30.5 | 10 | 22.3 | 31.1 |

# Chapter 5
# General Specifications

| Parameter | Rating |
|---|---|
| Capacitance tolerance | -20% /+80% |
| Capacitance range | 7mF to 700mF |
| ESR range | 18mΩ to 1200mΩ |
| Working Voltage | 0.7-18.0 volts |
| Power | 10's of Watts, short pulse widths |
| Foot Print | 12×12.5 mm, 10×15 mm, 17×17.5 mm, 28×17.5 mm, 48×30.5 mm |
| Operating temperature | -40°C to +70°C (CLG and CLC series)<br>-40°C to +85°C (CLK series) |
| Storage temperature | -10°C to +35°C |
| Surge voltage | 15% above rated voltage |
| Pulse current | No limit |
| De-rating | Not required |
| Polarity | No polarity |
| Number of full charge/discharge cycles | Over 500,000 |
| Safety | Constructed from environmentally friendly materials, no toxic fumes are released upon burning |

## Through-Hole Leads, Single

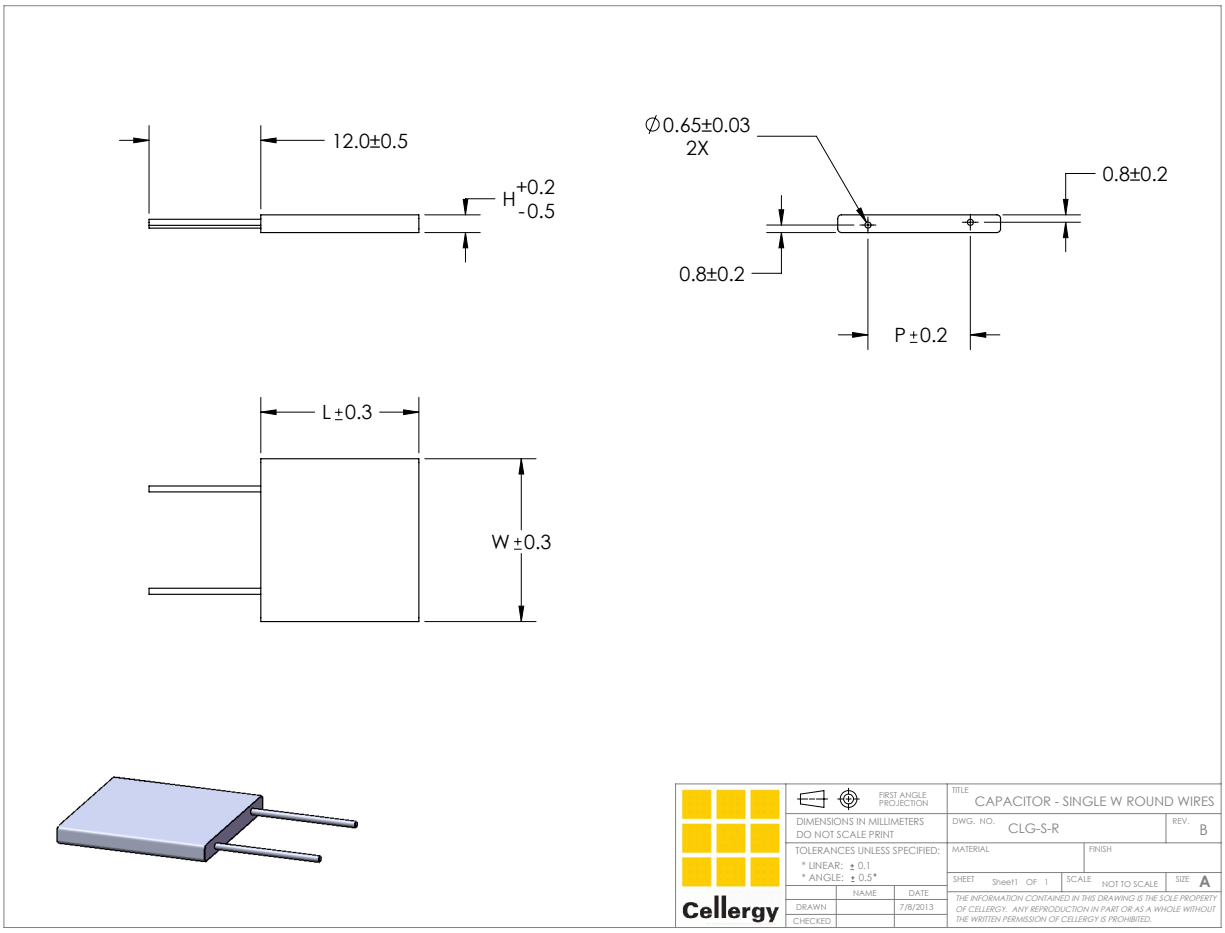


| Part Number | Nominal Voltage (Volts) | Length (mm) L | Width (mm) W | Height (mm) L | Pitch (mm) L |
|---|---|---|---|---|---|
| CLG03P012L12 | 3.5 | 12 | 12.5 | 2.4 | 8.0 |
| CLC04P010L12 | 4.2 | 12 | 12.5 | 2.9 | 8.0 |
| CLG03P025L17 | 3.5 | 17 | 17.5 | 2.4 | 11.0 |
| CLK04P040L17 | 4.2 | 17 | 17.5 | 3.2 | 11.0 |
| CLG03P060L28 | 3.5 | 28 | 17.5 | 2.4 | 11.0 |
| CLK04P100L28 | 4.2 | 28 | 17.5 | 3.4 | 11.0 |

## Through-Hole Leads, Double

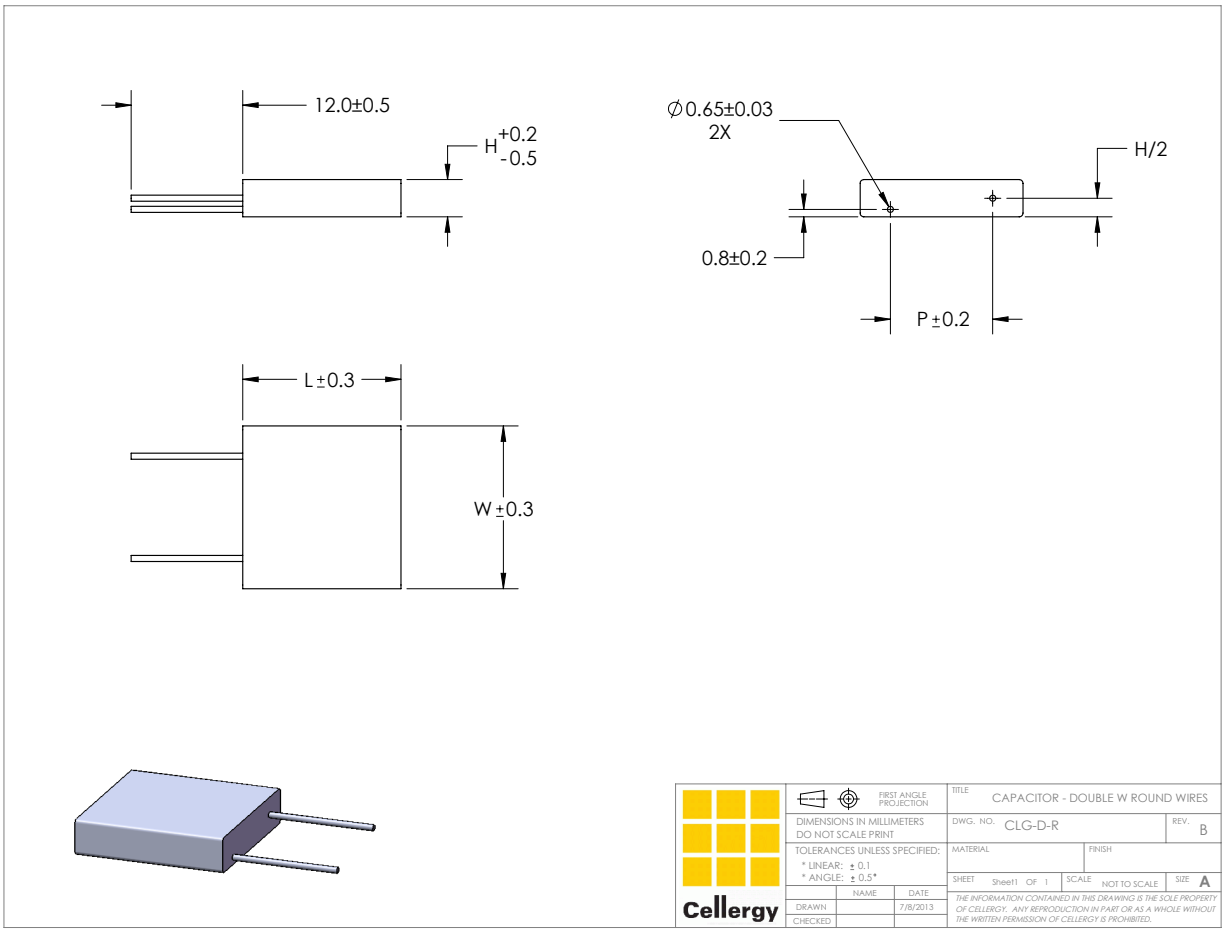


| Part Number | Nominal Voltage (Volts) | Length (mm) L | Width (mm) W | Height (mm) L | Pitch (mm) L |
|---|---|---|---|---|---|
| CLG03P025L12 | 3.5 | 12 | 12.5 | 3.4 | 8.0 |
| CLC04P020L12 | 4.2 | 12 | 12.5 | 4.2 | 8.0 |
| CLG03P050L17 | 3.5 | 17 | 17.5 | 3.4 | 11.0 |
| CLK04P080L17 | 4.2 | 17 | 17.5 | 5.2 | 11.0 |
| CLG03P120L28 | 3.5 | 28 | 17.5 | 3.4 | 11.0 |
| CLK04P200L28 | 4.2 | 28 | 17.5 | 5.3 | 11.0 |
| CLG03P420L48 | 3.5 | 48 | 30.5 | 3.4 | 22.3 |

## Flat Leads, Single

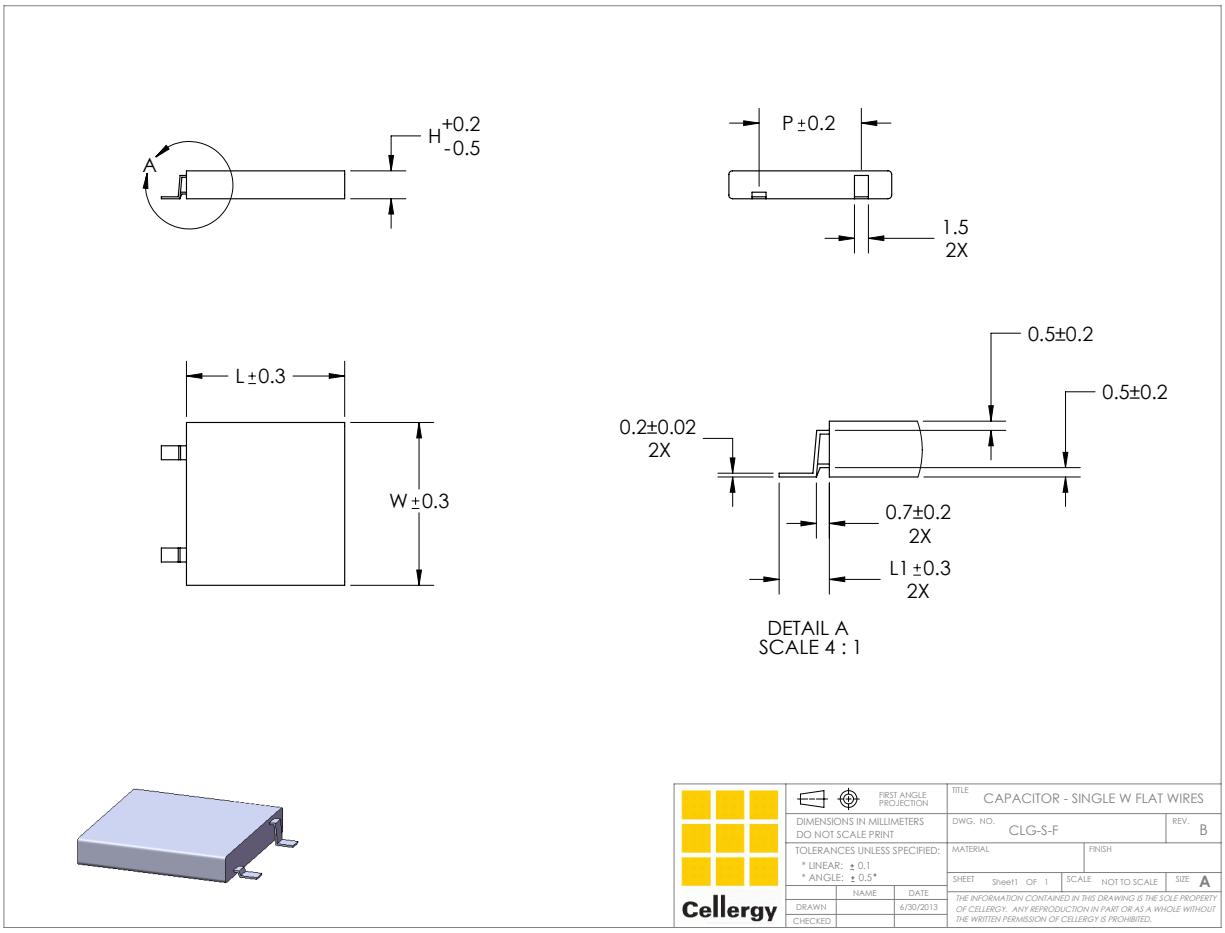


| Part Number | Nominal Voltage (Volts) | Length (mm) L | Lead Length (mm) L | Width (mm) W | Height (mm) L | Pitch (mm) L |
|---|---|---|---|---|---|---|
| CLG03P012F12 | 3.5 | 12 | 2.7 | 12.5 | 2.4 | 7.3 |
| CLC04P010F12 | 4.2 | 12 | 2.7 | 12.5 | 2.9 | 7.3 |
| CLG03P025F17 | 3.5 | 17 | 3.7 | 17.5 | 2.4 | 11.0 |
| CLK04P040F17 | 4.2 | 17 | 3.7 | 17.5 | 3.2 | 11.0 |
| CLG03P060F28 | 3.5 | 28 | 3.7 | 17.5 | 2.4 | 11.0 |
| CLK04P100F28 | 4.2 | 28 | 3.7 | 17.5 | 3.4 | 11.0 |

## Flat Leads, Double

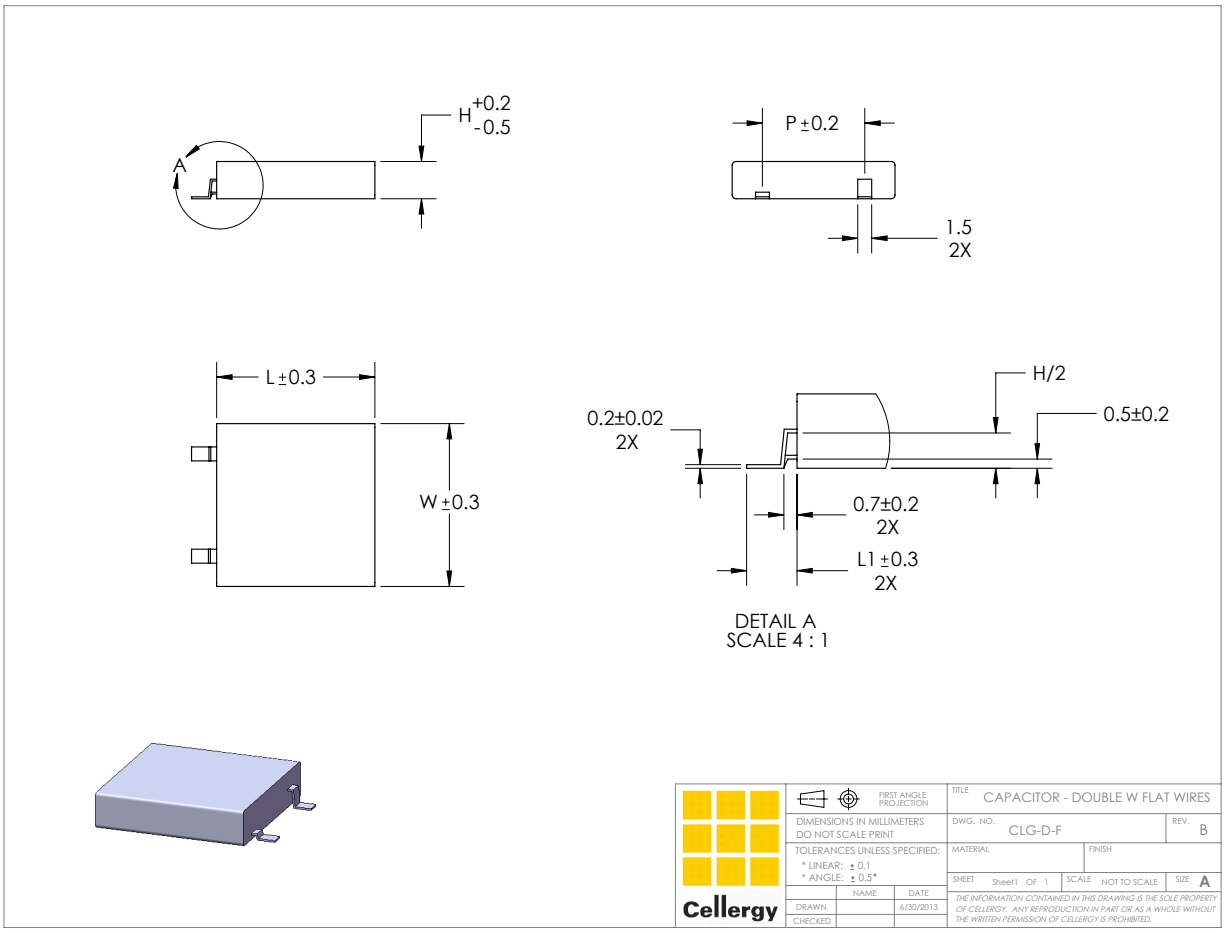


| Part Number | Nominal Voltage (Volts) | Length (mm) L | Lead Length (mm) L | Width (mm) W | Height (mm) L | Pitch (mm) L |
|---|---|---|---|---|---|---|
| CLG03P025F12 | 3.5 | 12 | 2.7 | 12.5 | 3.4 | 8.0 |
| CLC04P020F12 | 4.2 | 12 | 2.7 | 12.5 | 4.2 | 8.0 |
| CLG03P050F17 | 3.5 | 17 | .73 | 17.5 | 3.4 | 11.0 |
| CLK04P080F17 | 4.2 | 17 | .73 | 17.5 | 5.2 | 11.0 |
| CLG03P120F28 | 3.5 | 28 | 3.7 | 17.5 | 3.4 | 11.0 |
| CLK04P200F28 | 4.2 | 28 | 3.7 | 17.5 | 5.3 | 11.0 |

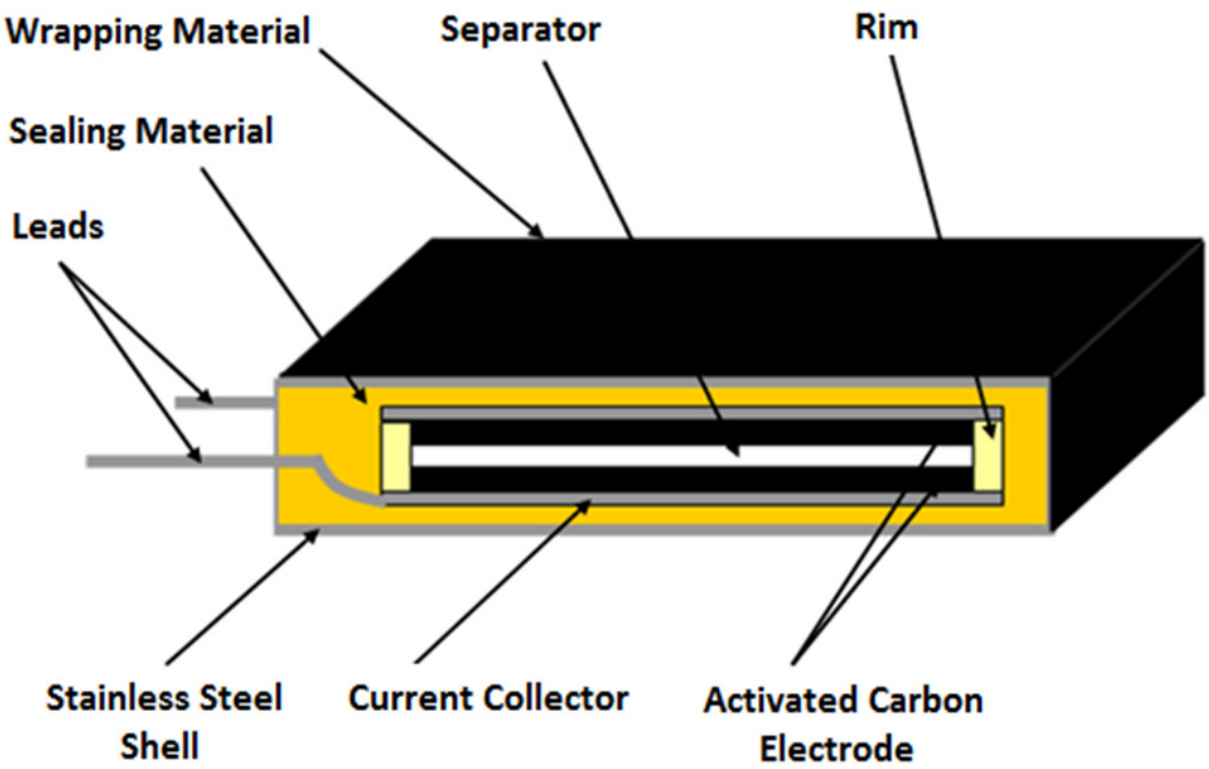
Wrapping Material
Separator
Rim
Sealing Material
Leads
Stainless Steel Shell
Current Collector
Activated Carbon Electrode

# Packing CL___12 Supercapacitors

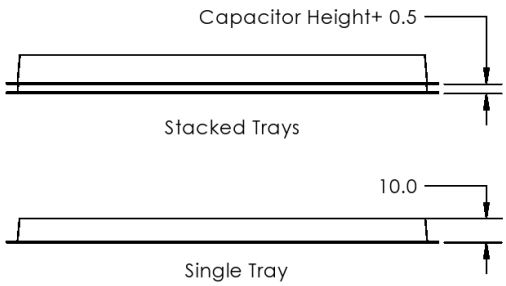


Note: All dimensions in millimeters

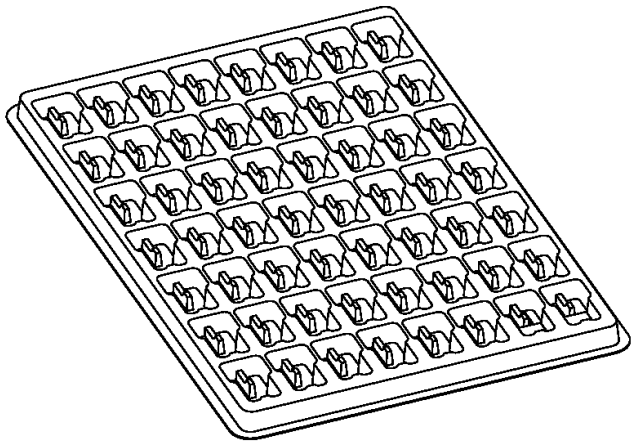

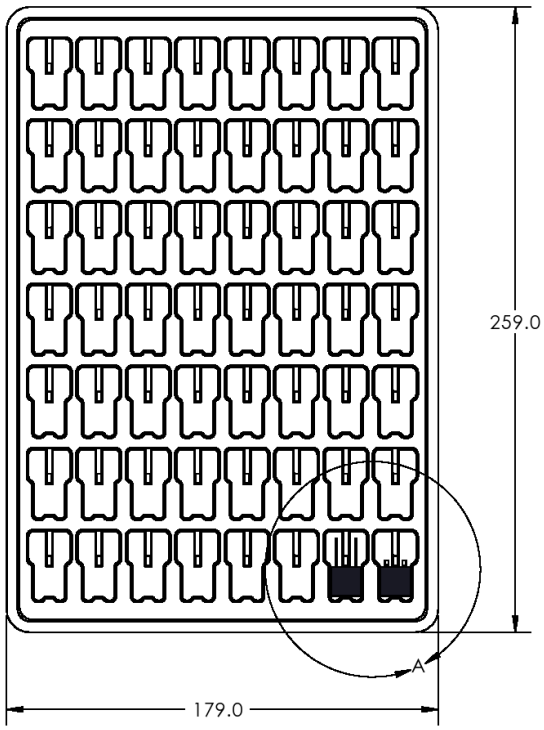


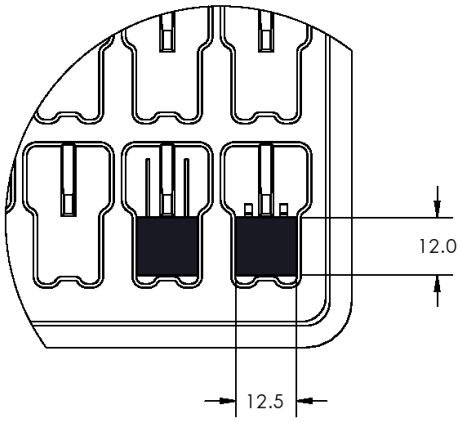


- CL___12 tray weight: 31 gr.
- CL___12 tray material: Transparent PVC

| Supercapacitors per Tray | Supercapacitor Type |
|---|---|
| 112 | Single |
| 56 | Double |

# Packing CL____17 Supercapacitors

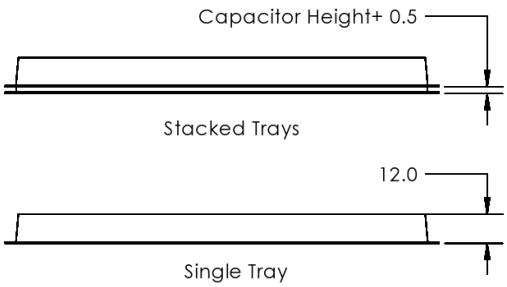


Note: All dimensions in millimeters

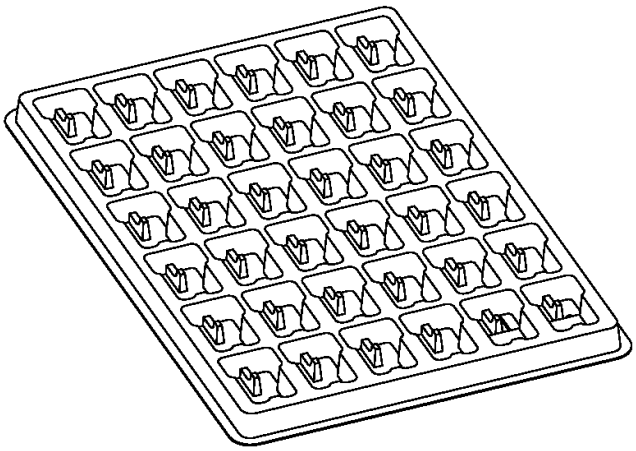

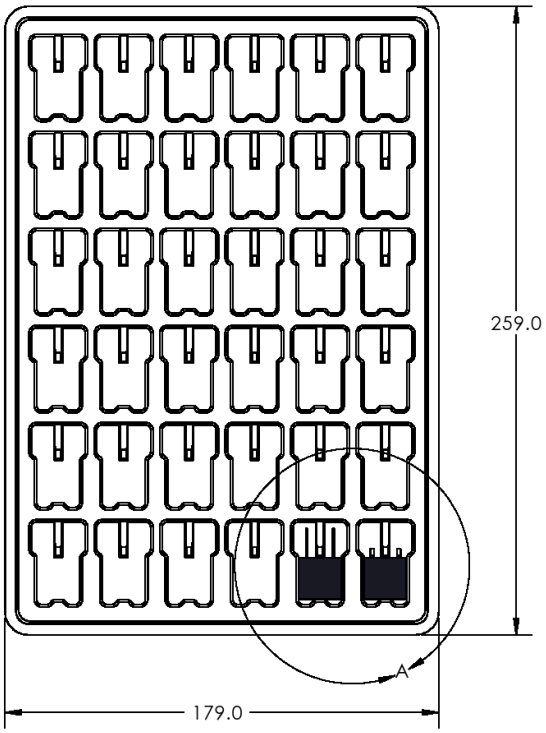


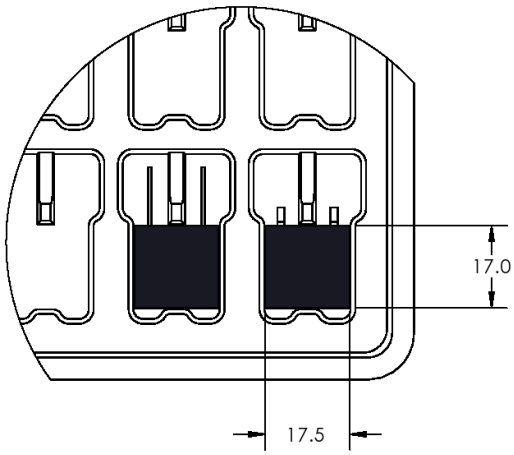


- CL___17 tray weight: 30 gr.
- CL___17 tray material: Transparent PVC

| Supercapacitors per Tray | Supercapacitor Type |
|---|---|
| 72 | Single |
| 36 | Double |

# Packing CL____28 Supercapacitors

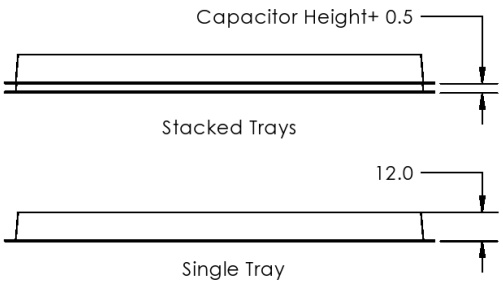


Note: All dimensions in millimeters

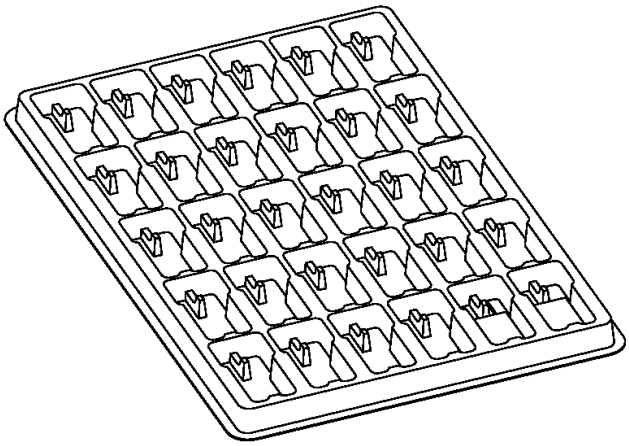

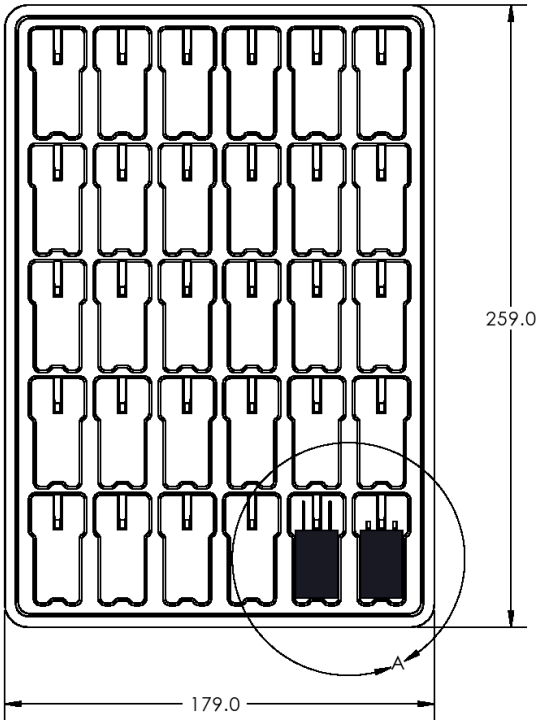


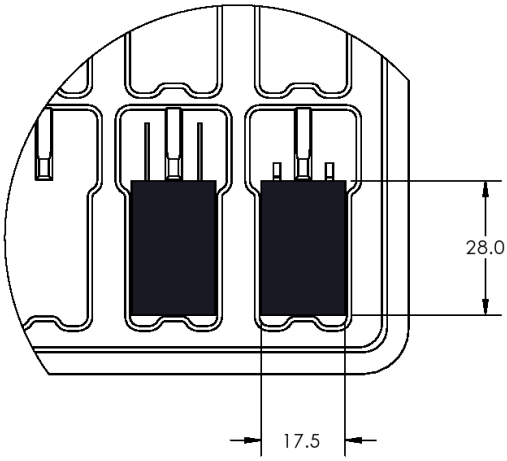


- CL___28 tray weight: 32 gr.
- CL___28 tray material: Transparent PVC

| Supercapacitors per Tray | Supercapacitor Type |
|---|---|
| 60 | Single |
| 30 | Double |

# Qualification Test Summary

| Test # | Item | Test Method | Expected Result |
|---|---|---|---|
| 1 | Initial capacitance | 1. Charge to rated voltage for 10 minutes.<br>2. Discharge at constant current, C=Idt/dv (as defined on page 27) | +80% / -20% of rated value |
| 2 | Initial leakage current (LC) | 1. Charge to rated voltage for 12 hours.<br>2. Measure current (as defined on page 27) | Within limits (refer to maximum values in line card tables) |
| 3 | Initial ESR | Measure at 1 KHz, 20 mV amplitude (as defined on page 27) | +20% / -50% of rated value |
| 4 | Endurance | 1. 1000 hours at 70°C at rated voltage (500 hours at 70°C for 12x12 footprint products) (500 hours at 85°C for CLK series products)<br>2. Cool to room temperature<br>3. Measure: ESR, LC, Capacitance | LC < 3.0 x rated value<br>Cap > 0.7 x rated value<br>ESR < 3.0 x rated value |
| 5 | Humidity life | 1. 1000 hours at 40°C, 90-95% humidity, no voltage<br>2. Cool to room temperature<br>3. Measure: ESR, LC, Capacitance | LC < 1.5 x rated value<br>Cap > 0.9 x rated value<br>ESR < 1.5 x rated value |
| 6 | Robustness of terminations | 1. In accordance with IEC 62391-1 and subject to test Ub of IEC 60068-2-21, "Bending", method 2:<br>2. Two bends at an angle of 90° in the same direction. | LC: rated value<br>Cap: rated value<br>ESR: rated value<br>No visual damage |
| 7 | Surge voltage | Perform the following steps 1000 times:<br>1. Apply 15% voltage above rated voltage for 10 seconds<br>2. Short-circuit the cell for 10 seconds<br>Measure: ESR, LC, Capacitance | LC < 2.0 x rated value<br>Cap > 0.7 x rated value<br>ESR < 3.0 x rated value |
| 8 | Temperature cycling | Perform 5 cycles consisting of the following steps:<br>1. Place supercapacitor in a cold chamber (–40°C) for 30 minutes<br>2. Keep supercapacitor at room temperature for 2 to 3 minutes<br>3. Place supercapacitor in a hot chamber (+70°C) for 30 minutes | LC < 1.5 x rated value<br>Cap > 0.9 x rated value<br>ESR < 1.5 x rated value |
| 9 | Vibration | In accordance with IEC 62391-1 and subject to test Fc of IEC 60068-2-6:<br>Frequency: 10 to 55 Hz<br>Amplitude of vibration: 0.75 mm<br>Perform vibration test in 3 directions - 2 hours per direction (6 hours total) | LC: rated value<br>Cap: rated value<br>ESR: rated value<br>No visual damage |

<table>
<tr><th>Measurement</th><th>Method</th></tr>
<tr><td>Initial Capacitance (Based on IEC 62391-1)</td><td>
1. Charge the capacitor to nominal voltage ($V_{nom}$) for 30 minutes by constant voltage.<br>
2. Discharge the capacitor with constant current ($I_{dsch}$) from voltage ($V_1$ = 80% of $V_{nom}$) to the voltage ($V_2$ = 40% of $V_{nom}$) while measuring the discharge time (Δt).<br>
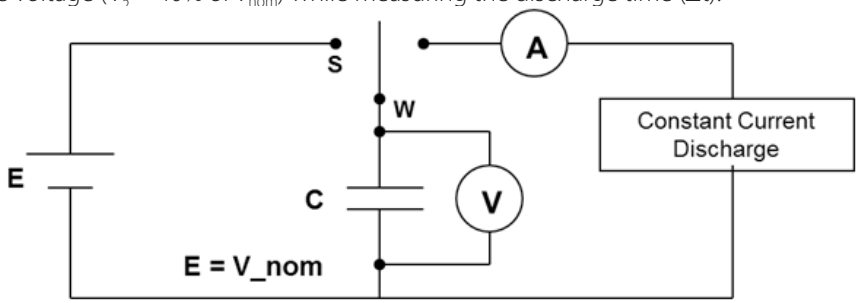

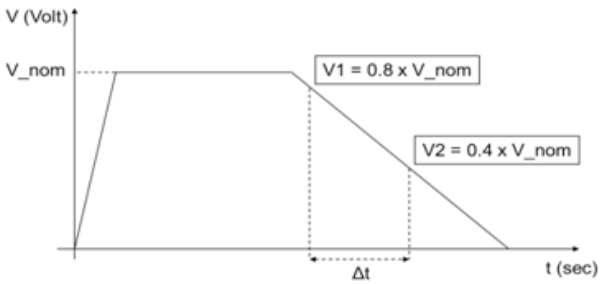

3. Calculate the capacitance using the formula: Capacitance = $I_{dsch}$*(Δt)/(V1-V2).<br>
According to international standard IEC 62391-1, the suggested I_dsch values are:
<table>
<tr><td>Footprint</td><td>L12</td><td>L12</td><td>L17</td><td>L17</td><td>L28</td><td>L28</td><td>L48</td><td>L48</td></tr>
<tr><td>Max. Allowed Leakage Current (μA)</td><td>3</td><td>6</td><td>6</td><td>12</td><td>10</td><td>20</td><td>30</td><td>60</td></tr>
<tr><td>I_dsch (mA)</td><td>2</td><td>5</td><td>5</td><td>10</td><td>10</td><td>20</td><td>30</td><td>60</td></tr>
</table>
</td></tr>
<tr><td>Initial ESR @ 1Khz (Equivalent Series Resistance)</td><td>
Measure ESR using the HIOKI Model 3560 AC Low Ohmmeter<br>
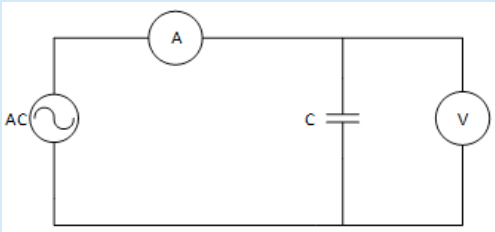

ESR[Ω] = V/I
</td></tr>
<tr><td>Initial Leakage Current</td><td>
1. Apply nominal voltage to the capacitor.<br>
2. Measure Vr after 12±1 hours.<br>
3. Calculate current using the following formula.<br>
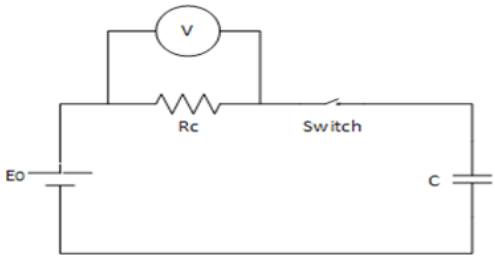

Eo : Nominal Voltage<br>
Rc: 1000Ω<br>
LC = V/Rc
</td></tr>
</table>

## ESR vs. Temperature

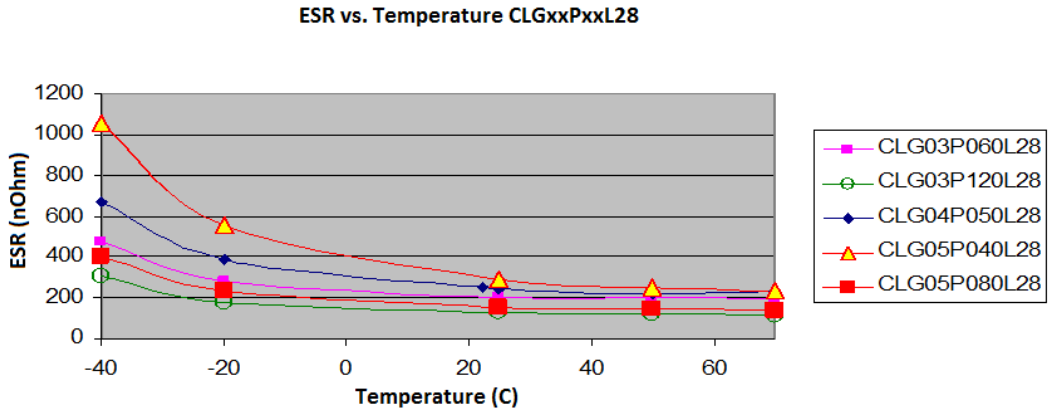


## Capacitance vs. Temperature

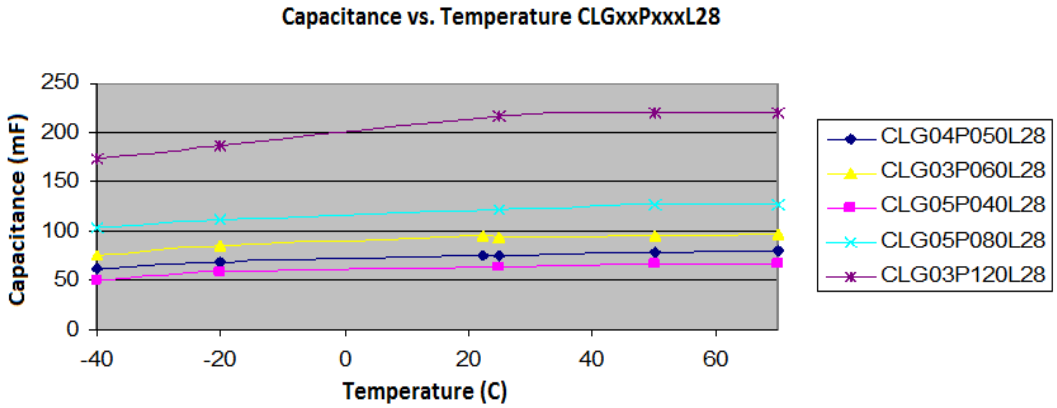


## Capacitance vs. Frequency

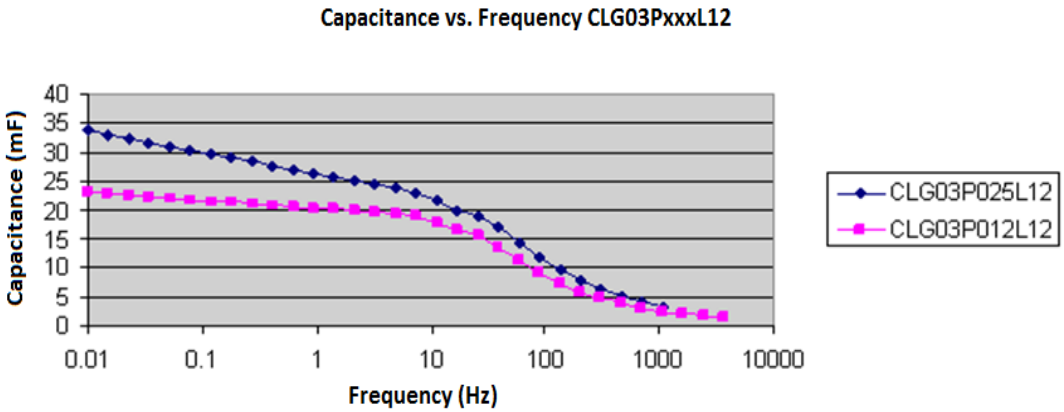

## Introduction

The Electrochemical Double Layer Capacitor (EDLC) or Supercapacitor is based on a double layer phenomenon involving the interaction between a conductive solid and an electrolyte. Double layer capacitance is the result of charge separation in the interphase. On the solid electrode, an electronic charge is accumulated, and in the electrolyte solution, a counter charge is accumulated in the form of an ionic charge.

The EDLC embodies high power density when compared to batteries and high energy density when compared to electrolytic capacitors, as shown in Figure 1.

Film capacitors store an electrical charge by means of two layers of conductive film (the electrodes) that are separated by a dielectric material. The charge accumulates on both conductive film layers, yet remains separated due to the dielectric between the conductive films.

Electrolytic capacitors are composed of metal to which is added a thin layer of non-conductive metal oxide which serves as the dielectric. These capacitors have an inherently larger capacitance than that of standard film capacitors. In both cases the capacitance is generated by an electronic charge and therefore the powering capability of these types of capacitors is relatively high while the energy density is much lower.

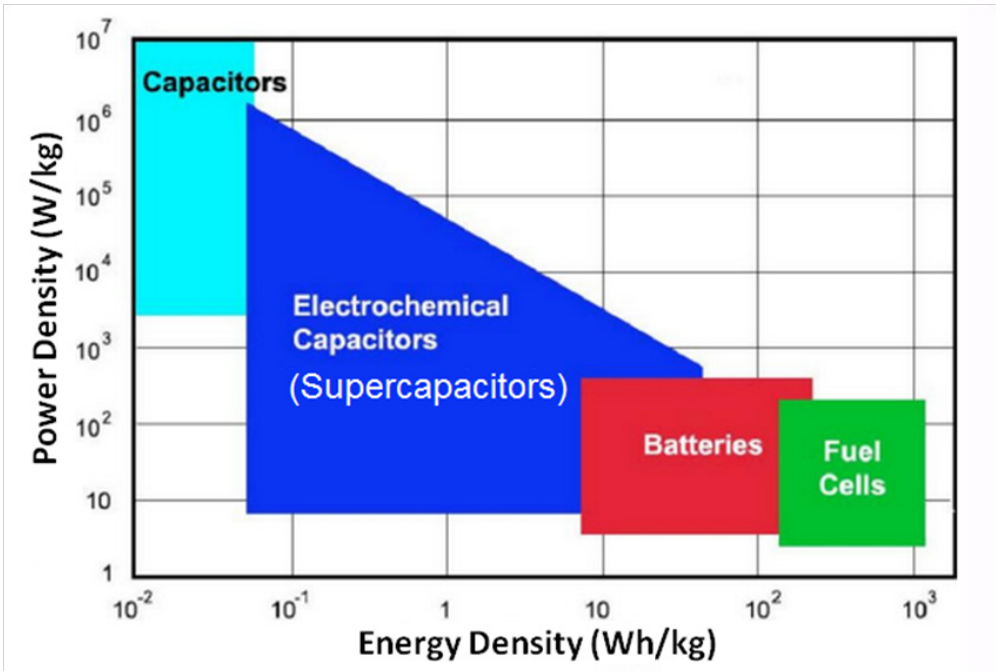


Figure 1: Specific Energy vs. Specific Power of Energy Storage Devices

## Electrochemical Double Layer Capacitors

Most EDLC's are constructed from two carbon based electrodes (mostly activated carbon with a very high surface area), an electrolyte (aqueous or organic) and a separator that allows the transfer of ions, but provides electronic insulation between the electrodes. As voltage is applied, ions in the electrolyte solution diffuse across the separator into the pores of the electrode of opposite charge. This process takes place simultaneously on both electrodes. Charge accumulates at the interphase between the electrodes and the electrolyte (the double layer phenomenon that occurs between a conductive solid and a liquid solution interphase), and forms two charged layers with a separation of several angstroms – the distance from the electrode surface to the center of the ion layer (d in Figure 2). The double layer capacitance is the result of charge separation in the interphase. Since capacitance is proportional to the surface area and the reciprocal of the distance between the two layers, high capacitance values are achieved.

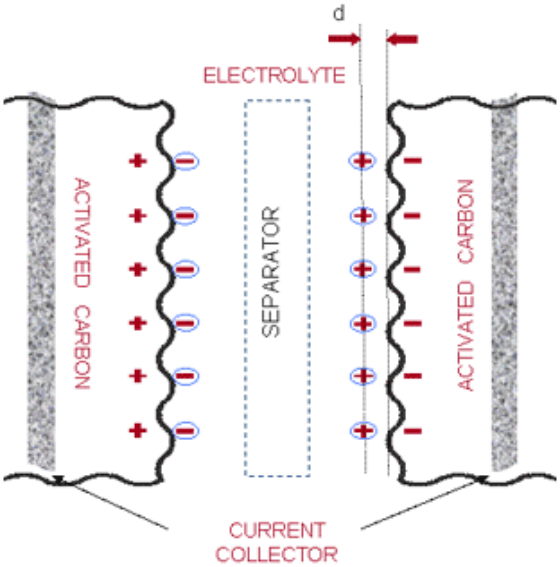


Figure 2: EDLC Schematic Diagram

EDLC's store electrical charge electrostatically, and almost no reaction occurs between the electrodes and the electrolyte. Consequently, electrochemical capacitors can undergo hundreds of thousands of charge and discharge cycles.

Between charging and discharging, ions and electrons shift locations:

- In the charged state, a high concentration of ions accumulates in the electrolyte close to the internal surface of the electrodes, while the electrons aggregate on surface of the electrode.
- As the electrons flow through an external discharge circuit, slower moving ions shift away from the double layer back into the bulk of the electrolyte.

During EDLC cycling, electrons and ions constantly move in the capacitor, yet no chemical reaction occurs. Therefore, electrochemical capacitors can undergo millions of charge and discharge cycles. This concept, when implemented with carbon electrodes featuring very high surface area and a three-dimensional structure, leads to incredibly high capacitance when compared with standard capacitors. This is different than in rechargeable batteries, in which a chemical reaction occurs between the ions of the electrolyte and the electrode, thus the cycle life of batteries is about 1000 to 1500 cycles.

One can envision the model of the EDLC as two capacitors formed by the solid-liquid interphase, separated by a conductive ionic separator. An equivalent electronic model (shown in Figure 3) consists of two capacitors connected in series, in which Cdl is the capacitance of each electrode, Rp is the parallel resistance to the electrode, and Rs is the resistance of the separator.

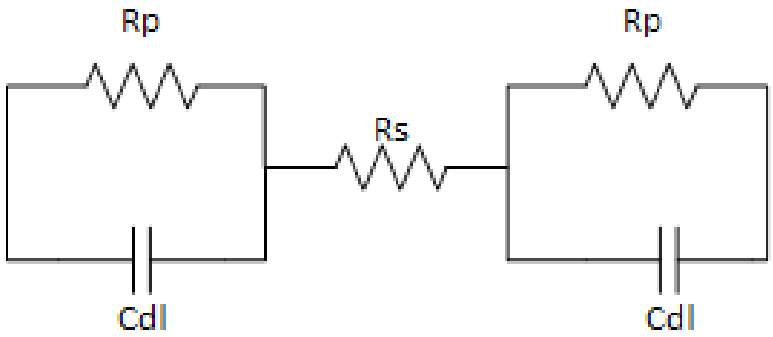


Figure 3: Supercapacitor-Equivalent Electronic Model

## Cellergy's Technology

Cellergy's patented printing technology is based on conventional screen or stencil printing techniques. It enables the automatic construction of supercapacitors that are manufactured in large wafers of EDLCs and cut into final dimensions. Developed and implemented by Cellergy, the automatic mechanized process reduces the need for human resources, making supercapacitors more affordable for additional applications, whereas the high price of supercapacitors had limited their use in the past.

The basis of Cellergy's technology is a printable electrode paste, consisting of high surface area activated carbon mixed with aqueous electrolytes and other additives. The paste is printed as an electrode matrix structure on an electronically conductive film (the current collector). The electrode is then encapsulated with a porous ionic conducting separator, and another electrode matrix is printed on a second current collector, creating a unit capacitor. By repeating the printing and assembly process, a multi-layered capacitor (bipolar supercapacitor constructed by alternately layering electrode material and separators) is created, consisting of stacked unit capacitors connected in series.

Cellergy's technology enables the production of capacitors in different dimensions, shapes and voltages, making the product customizable per customer requirement. The operating voltage of the supercapacitor may be increased by repeating the printing process as many times as required. More notably, the innovative printing technology developed by Cellergy has enabled the production of the smallest footprint (12*12.5 mm) pulse supercapacitor in today's market, enabling the supercapacitor to be easily incorporated in space-limited designs.

Cellergy produces prismatic supercapacitors in 5 sizes: 12*12.5 mm, 10*15 mm, 17*17 mm, 28*17 mm and 48*30 mm. The supercapacitor's height varies with the voltage from 2 mm in low voltage components to 10 mm for 12 Volt components. The capacitance varies from 7 mF to 700 mF, whereas larger footprints provide a higher capacitance.

Cellergy's supercapacitors are based on an aqueous electrolyte that is environmentally friendly, non-toxic, non-flammable, and unaffected by humidity. Though the system is water based, the capacitor can function under extreme temperature conditions – between -40°C and +70°C (or up to +85°C for the CLK series). This working temperature range is achieved using a unique water-based electrolyte that permeates the high surface carbon.

## EDLC and Battery Coupling

Under drain conditions, a battery undergoes a voltage drop. Voltage drop is proportional to the internal resistance or ESR. Since the internal resistance of batteries is high (and at low temperature it increases noticeably), voltage may drop below the cut off voltage, thus preventing operation of the device.

Many difficulties are encountered by the designer in attempting to meet the online power requirements of a system, mainly because the power supplied by batteries is limited. If the battery must supply high power at short pulse widths, the voltage drop may be too severe to supply the power and voltage required by the electronic device.

The heavy load on the battery may decrease the amount of usable energy stored in the battery, and even may harm the battery and shorten its work life.

This problem may be resolved by connecting an EDLC in parallel to the battery, as shown in Figure 4).

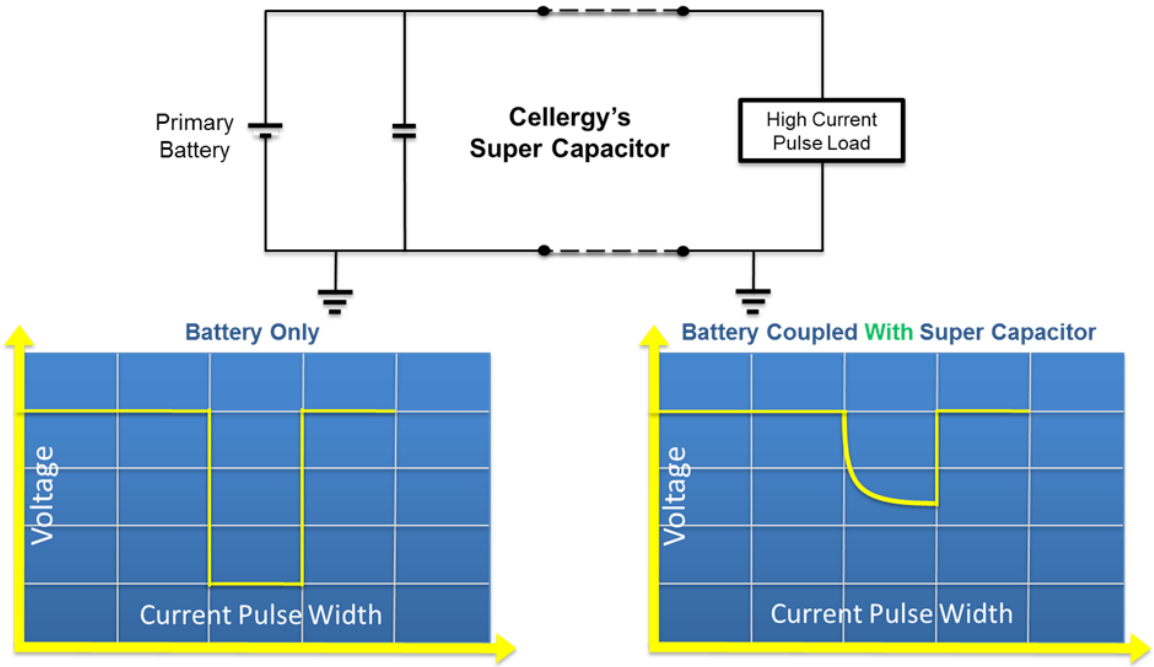


Figure 4: Basic Battery + Supercapacitor Electrical Scheme

Due to their low ESR, pulse supercapacitors reduce voltage drop in applications requiring high power and short duration current pulses. The decrease in voltage drop results better energy management and longer battery life.

The power supplied is produced by both the EDLC and the battery, and each supplies power inversely relative to its own ESR.

The inefficiency of batteries at low temperatures (down to -40°C) is well known – the capacitance of most batteries decreases at low temperatures. This decrease is due to the slow kinetics of the chemical reaction in the battery which increases the internal resistance of the battery.

At low temperatures, the voltage drop of the battery increases and reduces the usefulness of the battery. This voltage drop can be reduced greatly by coupling of the battery and the EDLC.

In conclusion, coupling the battery with an EDLC results in superior power management for many short interval and high power applications.

## Voltage Drop

Two main factors affect the voltage drop of all capacitors, including EDLCs.

The first voltage drop is defined as the Ohmic voltage drop. The capacitor has an internal resistance defied as ESR (Equivalent Series Resistance). As current flows through the capacitor, voltage drop occurs in accordance with Ohm's law. This voltage drop is instantaneous and will diminish the moment that no current is drawn.

The second voltage drop (capacitance-related voltage drop) is due to capacitor discharge. The voltage of the capacitor is directly proportional to the charge accumulated in the capacitor. During current discharge, capacitance is consumed (current emitting from the capacitor) thus causing a linear voltage decrease in the capacitor. When the current flow is halted, the voltage of the capacitor indicates the charge left in the capacitor.

The combination of the Ohmic-related voltage drop and the capacitance related voltage drop determine the actual voltage drop of an EDLC under drain conditions.

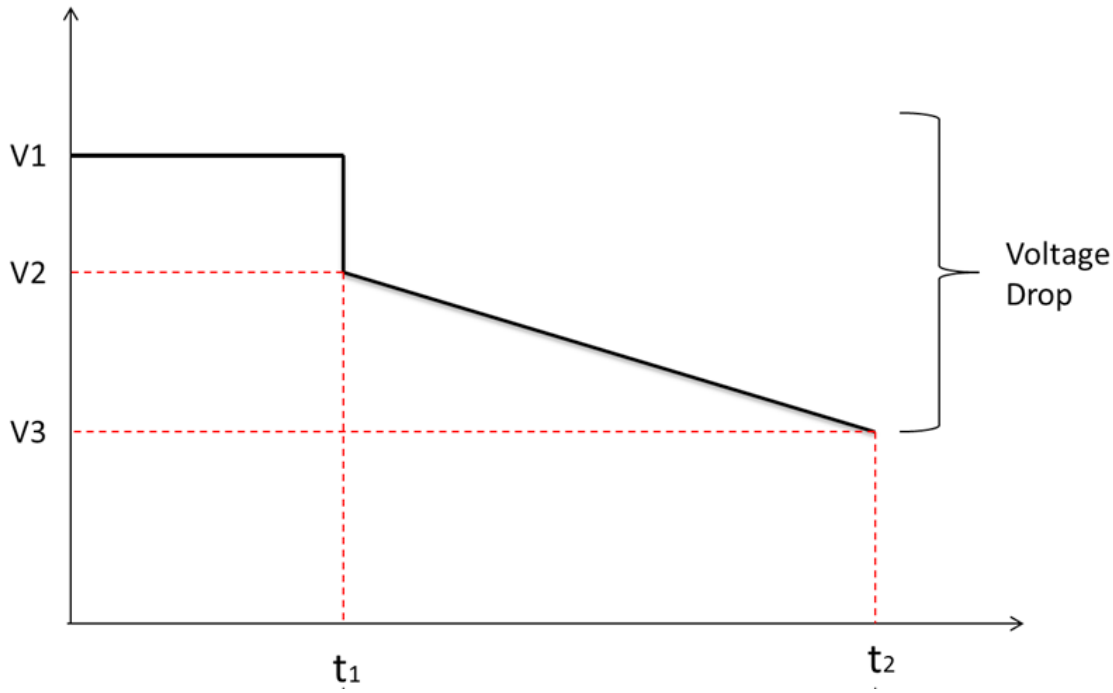


Figure 5: Voltage Drop Diagram

| Voltage Drop Type | Graphical Representation | Calculation |
|---|---|---|
| Ohmic | V1-V2 | $I_{pulse}$ *ESR |
| Capacitance-related | V2-V3 | $I_{pulse}$ *($t_2$-$t_1$)/capacitance |
| Total | V1-V3 | $I_{pulse}$ *ESR + $I_{pulse}$ *($t_2$-$t_1$)/capacitance |

# Soldering Methods

## Manual Soldering

Soldering irons should not touch the supercapacitor cell body.

| Parameter | Leaded Soldering Profile | Lead-Free Soldering Profile |
|---|---|---|
| Iron Temperature | < 410° C | < 435° C |
| Soldering Time | < 5 seconds | < 3 seconds |

## Wave Soldering

Wave soldering is a large-scale soldering process by which electronic components are soldered to a PCB to form an electronic assembly. The process is faster than manual soldering, and can therefore lower the cost of assembly while improving quality significantly. The name is derived from the use of waves of molten solder to attach metal components to the PCB.

Wave soldering is approved for Cellergy supercapacitors with **through-hole leads**.

## Reflow Soldering

Reflow soldering is not approved for Cellergy supercapacitors.

# Appendix C
# Safety and Operational Precautions

- Cellergy's supercapacitors should be used within the rated voltage range.
- Do not apply constant over-voltage. Peak voltage up to 15% above rated voltage is allowed.
- When designing your device, ensure that the supercapacitor is not located adjacent to heat-emitting elements. Higher supercapacitor temperatures will result in higher leakage current and may shorten life time.
- Extended use of the supercapacitor at elevated temperatures may shorten lifetime.
- Store Cellergy's supercapacitors under the following conditions:
  - Temperature: -10°C to +35°C
  - Relative Humidity: 45% to 75%
  - Store in a dust-free environment
- Maximum storage period – up to one year from the date of delivery, if stored under the conditions stated above.
- Do not disassemble Cellergy's supercapacitors.
- The tips of Cellergy's supercapacitor terminals are very sharp. Please handle with care.
- The Reflow soldering process is not approved for Cellergy's supercapacitors.
- Cellergy's supercapacitor do not feature polarity as the electrodes are symmetrical.
- Voltage is applied to the supercapacitors during Cellergy's qualification tests. The supercapacitor may be delivered with residual voltages that remain after shorting the cells. A plus sign is designated accordingly on the label.
- Cellergy's supercapacitors are covered by an insulating wrapper. When mounting the supercapacitor, make sure that the wrapper is undamaged.
- Do not expose Cellergy's supercapacitors to acids or alkaline materials.
- Do not polish the Cellergy supercapacitor's terminals.
- Cleaning/Washing
  - Cellergy's supercapacitors are not suitable for solvent based cleaning.
  - Cleaning with water-based solutions for removal of flux residues may be performed only after testing and approval by end user (check visually that there is no damage to the supercapacitor and label).
  - Do not wash at temperatures exceeding 70°C, or at spray pressures exceeding 50 psi.
  - This product should be treated as industrial waste and is not to be incinerated.

# Appendix D
# Warranty

Cellergy's supercapacitor warranty policy is as follows:

1. The warranty period is 12 months, beginning on the shipment date.
2. The warranty covers material and/or production failures of Cellergy products that were transported, stored, installed and maintained in a proper way and in conformance with the specification, application guides, and recommendations from Cellergy Ltd.
3. The warranty is invalidated automatically if the product is used for aims other than those intended, or if the product has been dismounted.
4. During the warranty period, Cellergy Ltd. undertakes to replace or repair free of charge the product and whichever parts may prove to be defective from their point of origin. Warranty-based repairs will be performed at Cellergy Ltd. facilities.