MICRO SWITCH
FREEPORT ILLINOIS, U.S.A.
A DIVISION OF HONEYWELL
FED. MFG. CODE 91929

SWITCH – BASIC

CATALOG LISTING
YZ-2R-A21
AWF2550

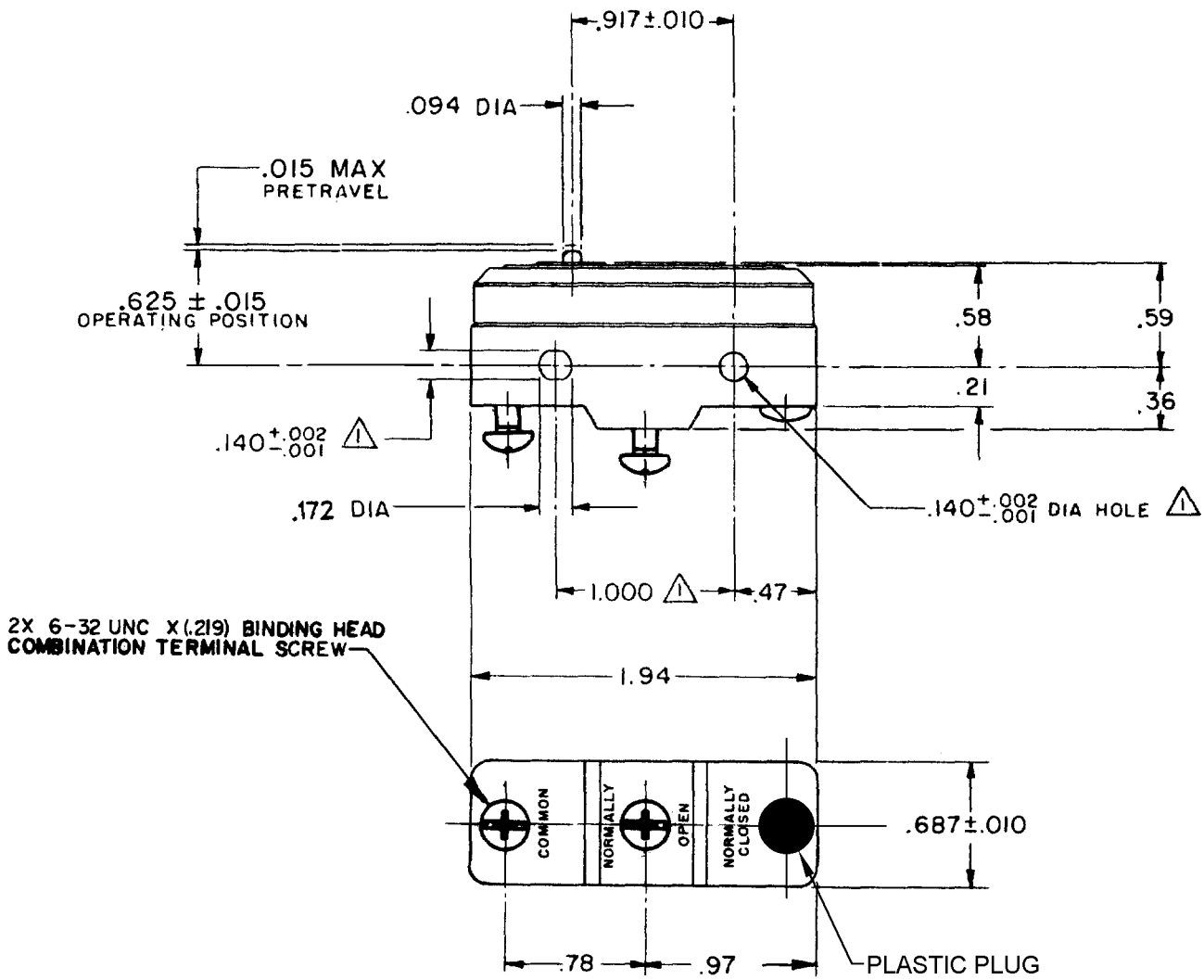

NOTE
1 MOUNTING HOLES WILL ACCEPT PINS OR SCREWS OF .139 MAX DIA ON 1.000 ± .002 CENTERS

THIS DRAWING COVERS A PROPRIETARY ITEM AND IS THE PROPERTY OF MICRO SWITCH, A DIVISION OF HONEYWELL. THIS DRAWING IS NOT TO BE COPIED OR USED WITHOUT THE APPROVAL OF MICRO SWITCH.

THIRD ANGLE PROJECTION

CHARACTERISTICS

OPERATING FORCE ——— 9-13 OZ
RELEASE FORCE ——— 4 OZ MIN
DIFFERENTIAL TRAVEL ——.0004—.0020
OVERTRAVEL ——— .005 MIN

ELECTRICAL DATA

CONTACT ARRANGEMENT
S P N O

CODE L96 15A-125, 250 OR 480 VAC
1/8 HP-125 VAC; 1/4 HP-250 VAC
1/2 A-125 VDC; 1/4 A-250 VDC

-L288-
-L306-
-L315-
16A 250V ~ T85 5E4

SCALE FULL
DO NOT SCALE PRINT

TOLERANCES
APPLY TO DESIGN UNITS. CONVERSIONS ARE ONLY FOR REFERENCE. UNLESS NOTED, TOLERANCES ARE ±

	DIM. mm	TOL. mm/in	DIM. in	TOL. mm/in
NO PLACES	X	1/.04		
ONE PLACE	X.X	0.4/.018	X X	0.8/.03
TWO PLACES	X.XX	0.15/.006	X XX	0.38/.015
THREE PLACES			X XXX	0.13/.005
ANGLES				

DESIGN UNITS SI METRIC ☐ US CUSTOMARY ■

WEIGHT .063 LB

M YZ-2R-A21
PAGE 1 OF 1
RELEASE NO. PR-3836
REPLACES
DRAWING NUMBER
ISSUE 12
CHECK

REVISIONS

A	OBS DWG C082292	C S L 26 JAN 96
B	REINST PR22383	D L T 18 SEP 96
C	C093346	D L T 22 SEP 98
D	0000624	JAH 23 JUN 03
E	0015138	SPK 29 AUG 05

DRAWN D L T 18 SEP 96 CHECK RJ 29 AUG 05 CHECK

RASTER