DATE	DESCRIPTION	REV.
12.08.08	CHANGE AS PER ECN 08–188	A

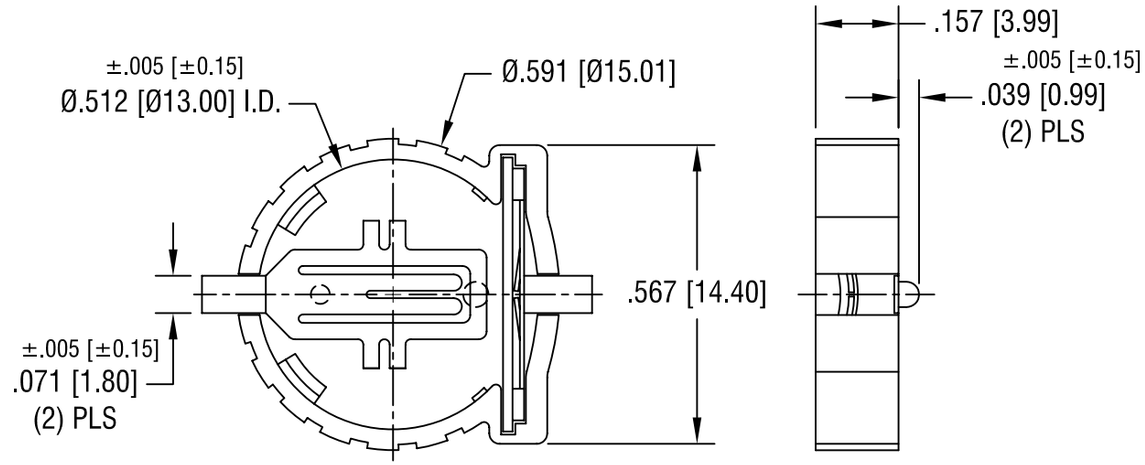

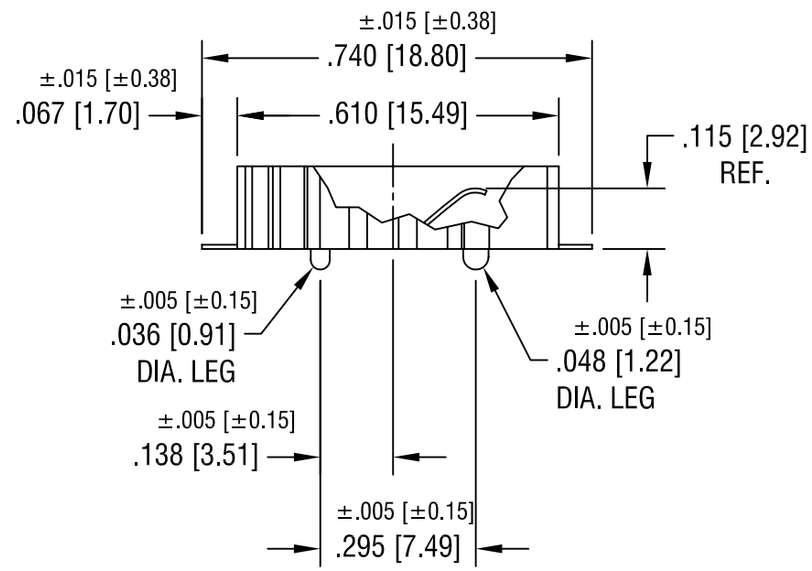

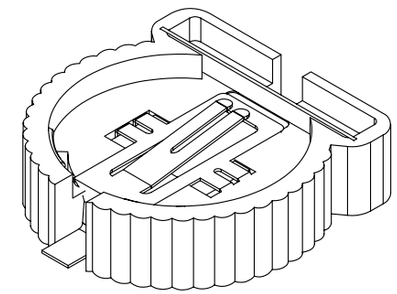

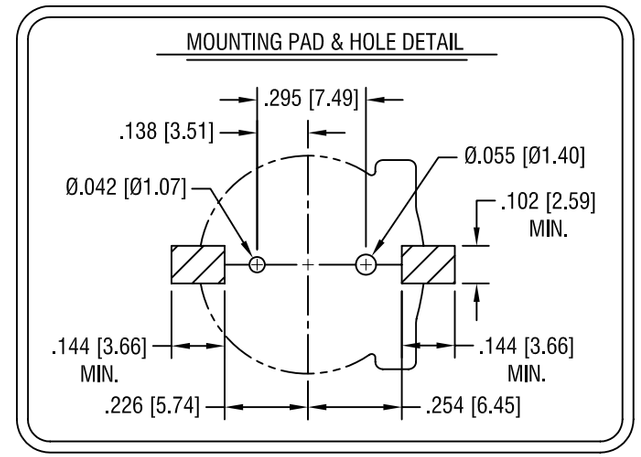

NOTES:

1. BASE:
   MAT'L - GLASS FILLED PPS UL 94V-0
2. CONTACTS:
   MAT'L - .008 [0.20] TH'K PHOSPHOR BRONZE
   FINISH - GOLD FLASH , OVER NICKEL PLATE

THIS DOCUMENT IS THE PROPERTY OF KEYSTONE ELECTRONICS CORP. AND SHALL NOT BE REPRODUCED, DISTRIBUTED OR USED AS A BASIS FOR MANUFACTURE WITHOUT PRIOR WRITTEN PERMISSION FROM KEYSTONE ELECTRONICS CORP.

KEYSTONE ELECTRONICS CORP.
ASTORIA, N.Y. 11105-2017

PART NAME	1220 BATTERY HOLDER, SMT		
MATERIAL	AS NOTED		
FINISH	AS NOTED	DRN BY BOONE	DATE 9.15.05
		APP'D LN	SCALE 3X
TOLERANCES INCH [MM] DECIMAL ± .010 [± 0.25] ANGULAR ± 1° UNLESS OTHERWISE SPECIFIED	CODE C/M	DWG NO. 1056	